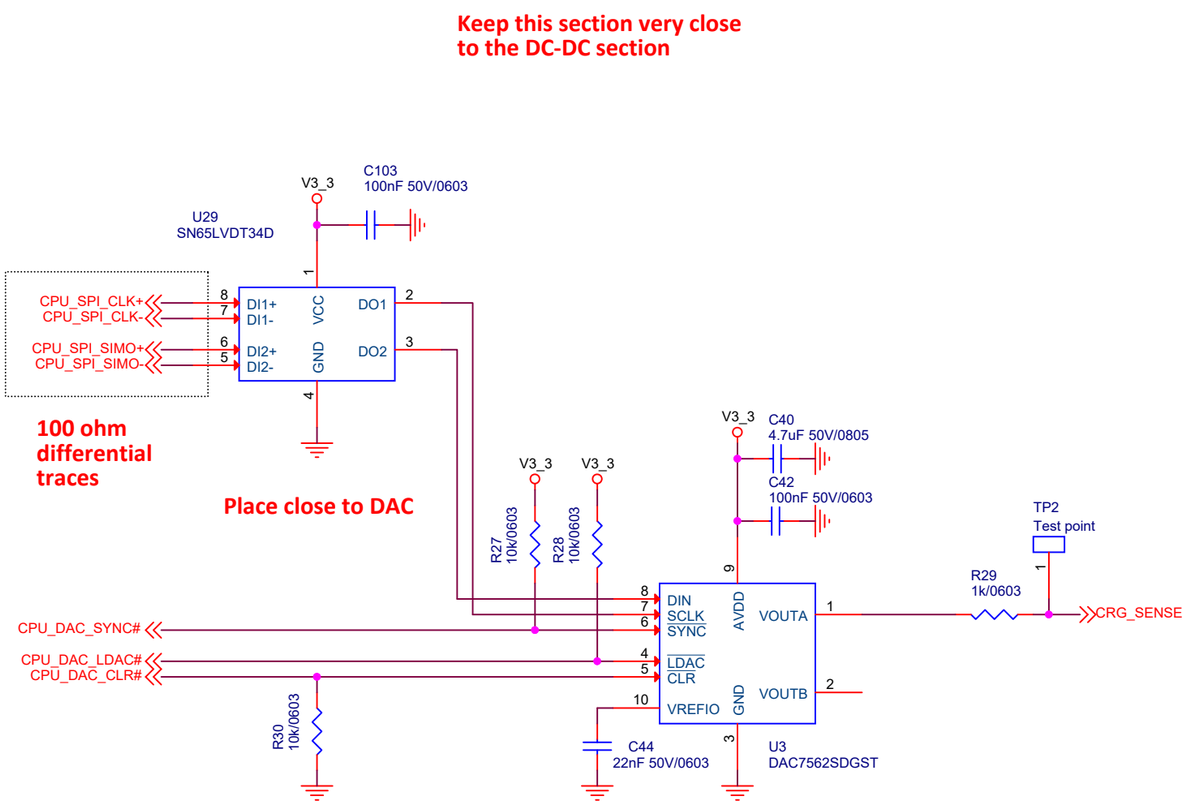
Keep this section very close
to the DC-DC section
V3_3
C103
100nF 50V/0603
U29
SN65LVDT34D
CPU_SPI_CLK+
CPU_SPI_CLK-
CPU_SPI_SIMO+
CPU_SPI_SIMO-
DI1+
DI1-
DI2+
DI2-
VCC
GND
DO1
DO2
100 ohm
differential
traces
Place close to DAC
V3_3
V3_3
R27
10k/0603
R28
10k/0603
V3_3
C40
4.7uF 50V/0805
C42
100nF 50V/0603
TP2
Test point
R29
1k/0603
CRG_SENSE
CPU_DAC_SYNC#
CPU_DAC_LDAC#
CPU_DAC_CLR#
DIN
SCLK
SYNC
LDAC
CLR
VREFIO
AVDD
GND
VOUTA
VOUTB
R30
10k/0603
C44
22nF 50V/0603
U3
DAC7562SDGST

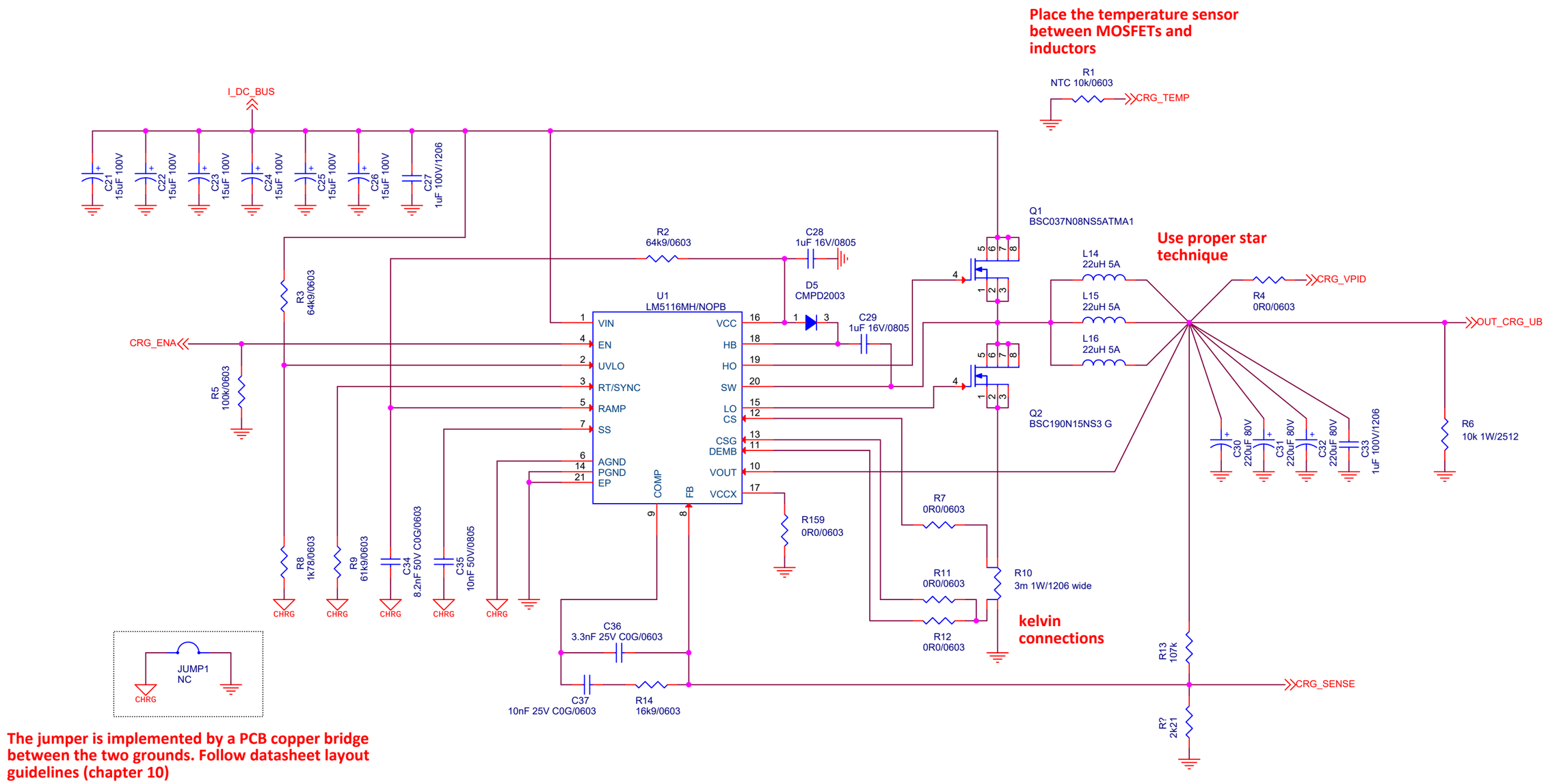
Place the temperature sensor between MOSFETs and inductors
R1
NTC 10k/0603
CRG_TEMP
I_DC_BUS
C21 15uF 100V
C22 15uF 100V
C23 15uF 100V
C24 15uF 100V
C25 15uF 100V
C26 15uF 100V
C27 1uF 100V/1206
Q1
BSC037N08NS5ATMA1
R2
64k9/0603
C28
1uF 16V/0805
Use proper star technique
L14
22uH 5A
L15
22uH 5A
L16
22uH 5A
CRG_VPID
R4
0R0/0603
OUT_CRG_UB
R3
64k9/0603
U1
LM5116MH/NOPB
D5
CMPD2003
C29
1uF 16V/0805
CRG_ENA
VIN
EN
UVLO
RT/SYNC
RAMP
SS
AGND
PGND
EP
VCC
HB
HO
SW
LO
CS
CSG
DEMB
VOUT
VCCX
COMP
FB
R5
100k/0603
Q2
BSC190N15NS3 G
C30 220uF 80V
C31 220uF 80V
C32 220uF 80V
C33 1uF 100V/1206
R6
10k 1W/2512
R159
0R0/0603
R7
0R0/0603
R8
1k78/0603
R9
61k9/0603
C34
8.2nF 50V C0G/0603
C35
10nF 50V/0805
R11
0R0/0603
R10
3m 1W/1206 wide
R12
0R0/0603
kelvin connections
CHRG
C36
3.3nF 25V C0G/0603
C37
10nF 25V C0G/0603
R14
16k9/0603
R13
107k
R?
2k21
CRG_SENSE
JUMP1
NC
The jumper is implemented by a PCB copper bridge between the two grounds. Follow datasheet layout guidelines (chapter 10)
TP16
Test point