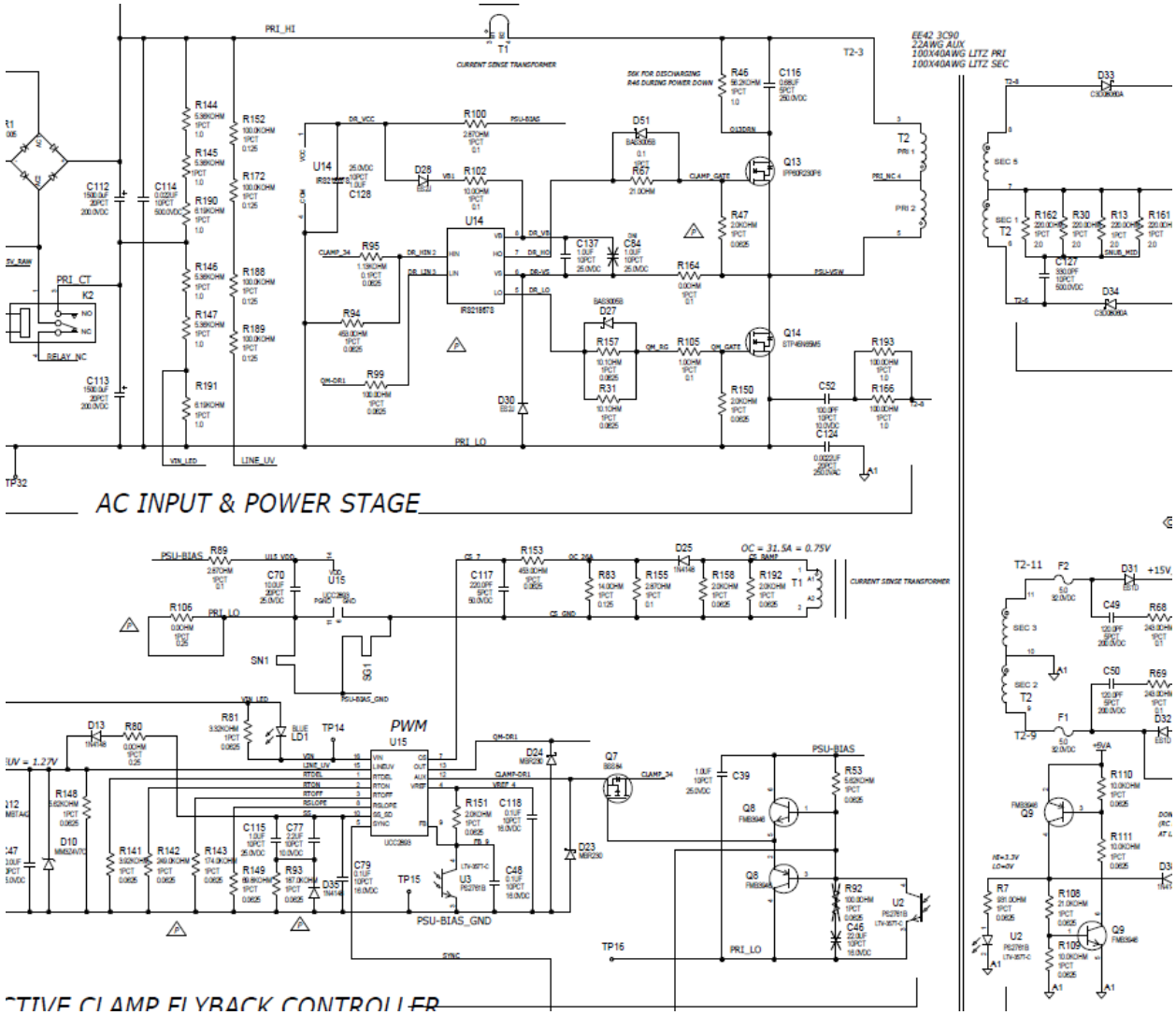
AC INPUT & POWER STAGE
PWM
CTIVE CLAMP FLYBACK CONTROLLER
EE42 3C90
22AWG AUX
100X40AWG LITZ PRI
100X40AWG LITZ SEC
CURRENT SENSE TRANSFORMER
PRI_HI
PRI_LO
PSU-BIAS
PSU-BIAS_GND
RELAY_NC
IR2184S
UCC2868
OC = 31.5A = 0.75V

File
Edit
Utility
Help
Waveform View
Horizontal Zoom Scale
500.00 ns/div
(200.00 kx zoom)
Vertical Zoom
(1.00x zoom)
QM-DR1
SYNC
Q14_VDS
PRIM-CS
Q14_VGS
SYNC_ENA
PSU_BIAS
Add New...
Cursors
Note
Measure
Search
Results Table
Plot
DVM
DC
-59.07 mV
Meas 8
RMS
μ': 1.520 V
Ch 2
200 mV/div
50 Ω
20 MHz
Ch 5
2 V/div
DS
20 MHz
Ch 6
1 V/div
20 MHz
Ch 7
1 V/div
50 Ω
20 MHz
Ch 1
2 V/div
20 MHz
Ch 4
2 V/div
20 MHz
Ch 8
2 V/div
DS
20 MHz
Ch 3
100 V/div
1 MΩ
20 MHz
Add New Math
Add New Ref
Add New Bus
Horizontal
100 ms/div
1 s
SR: 25 MS/s
40 ns/pt
RL: 25 Mpts
21.9%
Trigger
360 mV
Acquisition
Manual, Analyze
Sample: 12 bits
Single: 0 /1
Preview
22 Oct 2019
10:50:08 AM