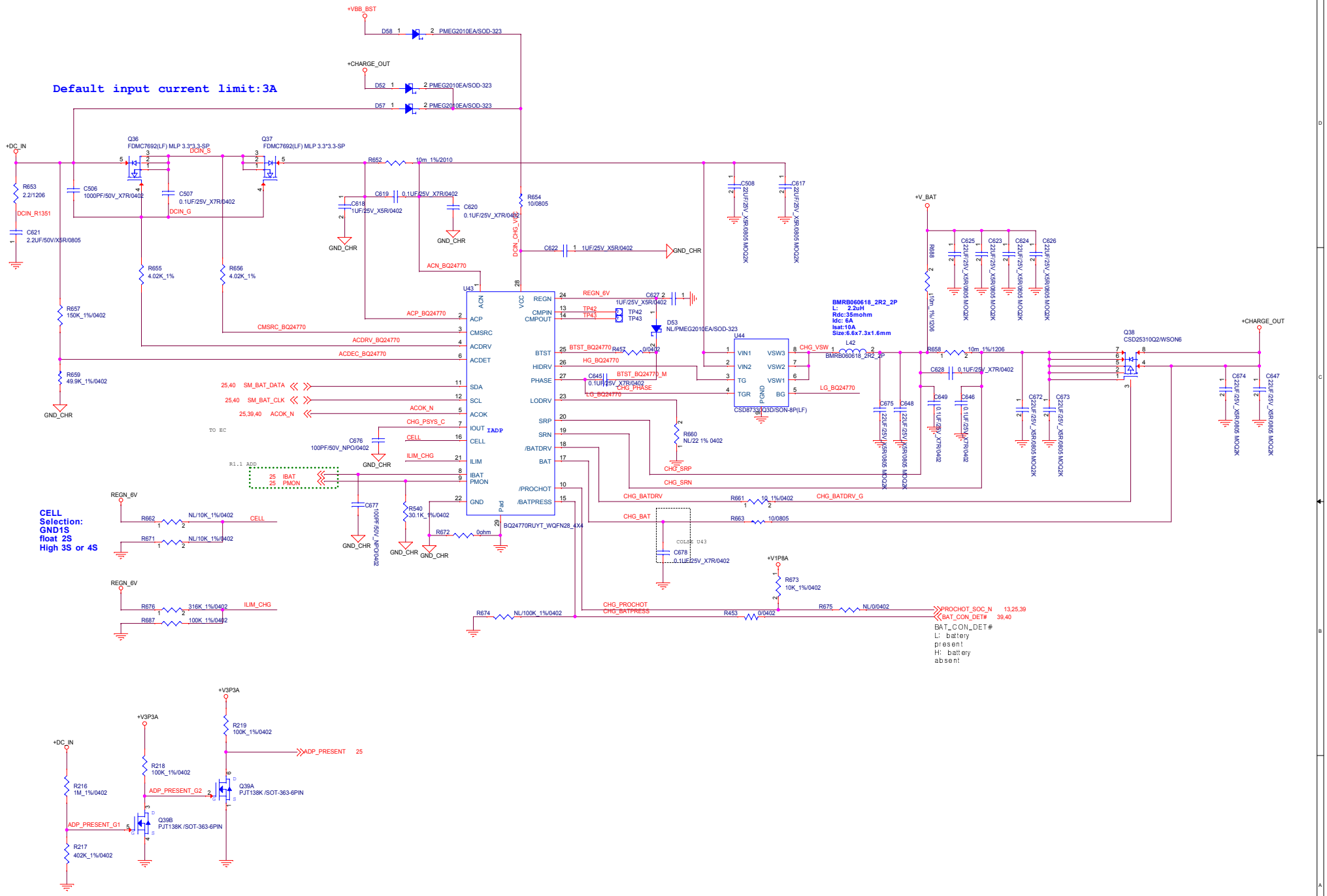

DT Research

DC IN_CHARGE

Size	Document Number	Rev
C	DT362GL_R10	1.2

Date: Thursday, October 24, 2019 Sheet 38 of 47