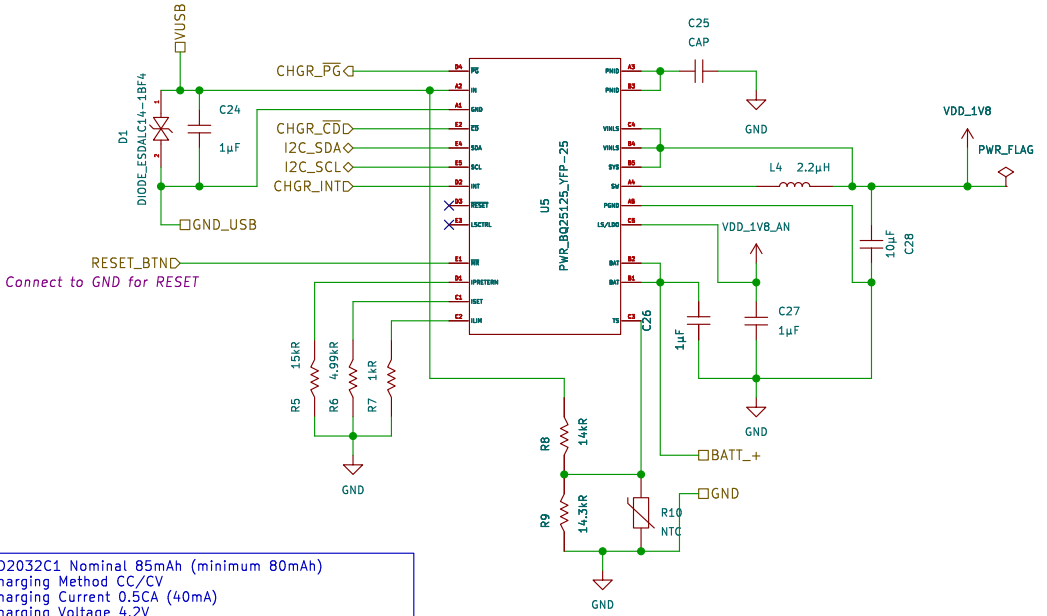

PD2032C1 Nominal 85mAh (minimum 80mAh)
Charging Method CC/CV
Charging Current 0.5CA (40mA)
Charging Voltage 4.2V
Charging End Condition 2.4mA (in CV mode)
Charging Time <3h
Discharge current 0.2CA (16mA), max 2CA (160mA)
Discharge Cut off Voltage 3V

R_{ISET} = 4.99kR
= 40mA

R_{ILIM} = 1kR
= 200mA max input current

$R_{IPRETERM}$ = 15kR
= 5% of I_{SET} = 2mA

NTCG163JF103FTDS
Calculated with BQ Setup Guide Tool
RHot (60°) 3020R –> R_high 14000R
RCold (0°) 27280 –> R_lo 14300R