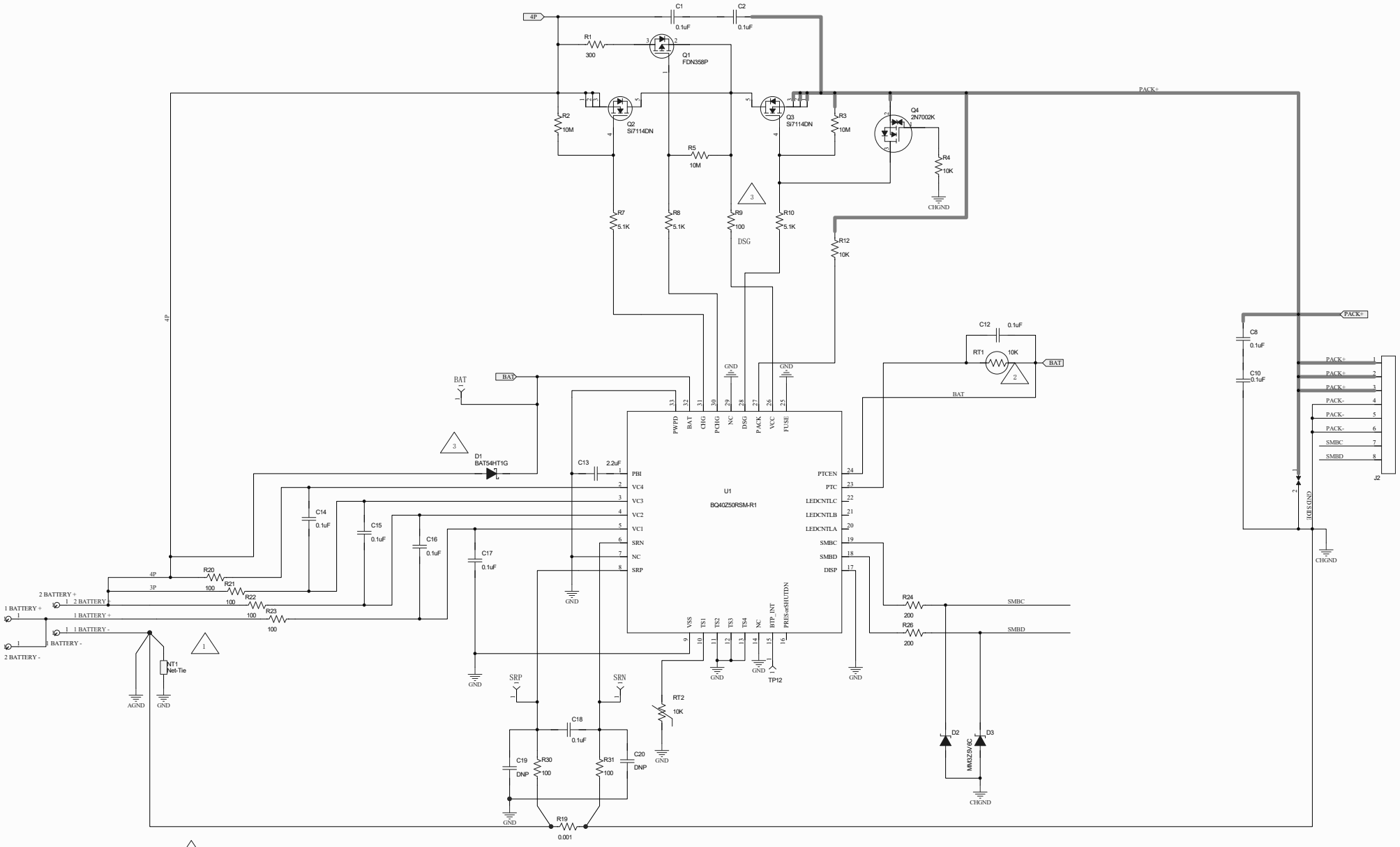


| Title | | |
|---|---|---|
| Size A2 | Number | Revision |
| Date: 2018/11/28 | | Sheet of |
| File: E:\AN Handheld devices 1ms6\...\GAUGE.SchDoc | | Drawn By: |