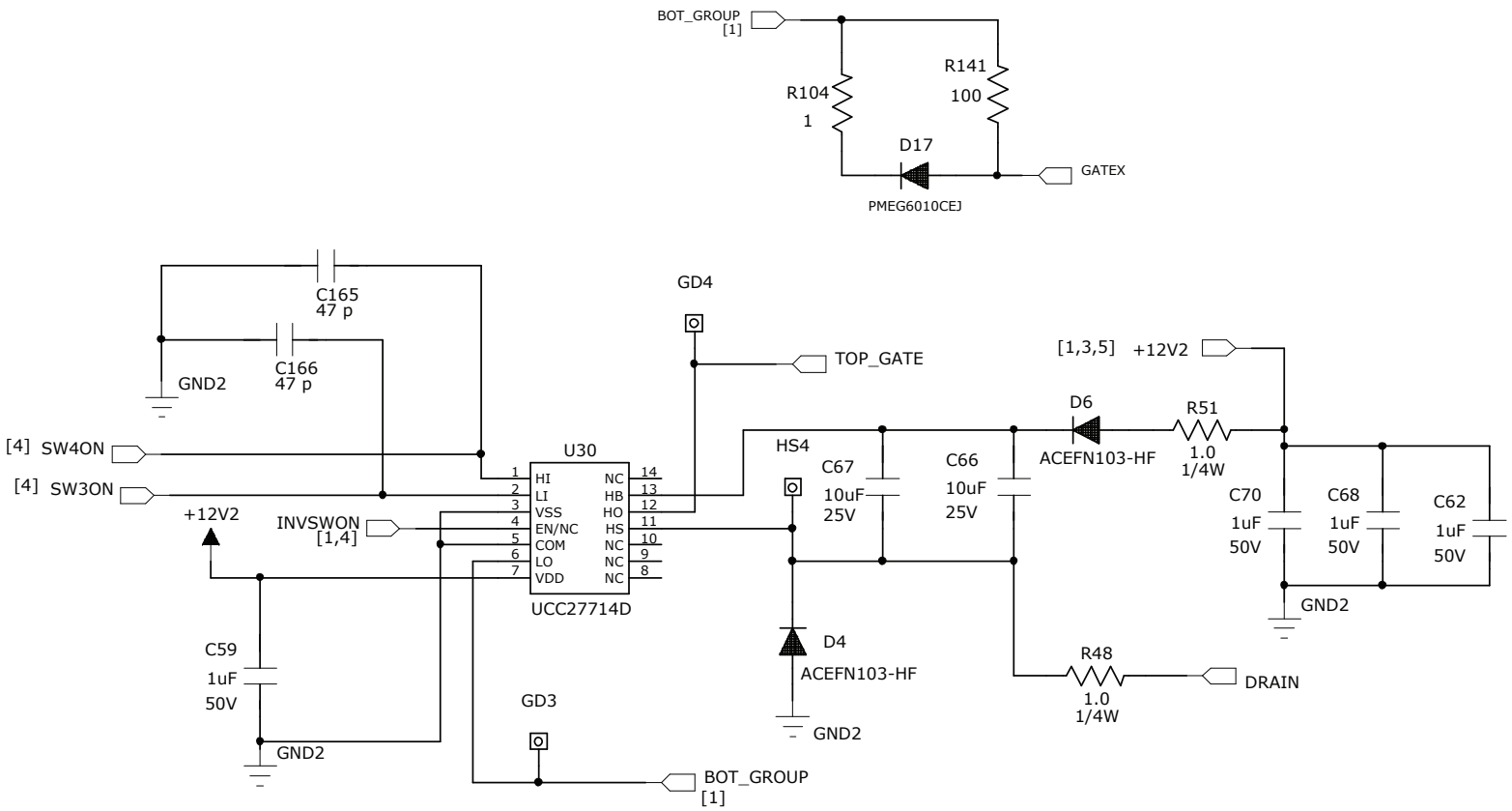
BOT_GROUP
[1]
R104
1
R141
100
D17
PMEG6010CEJ
GATEX
C165
47 p
C166
47 p
GND2
GD4
TOP_GATE
[1,3,5] +12V2
D6
ACEFN103-HF
R51
1.0
1/4W
[4] SW4ON
[4] SW3ON
U30
HI
LI
VSS
EN/NC
COM
LO
VDD
NC
HB
HO
HS
NC
NC
NC
UCC27714D
HS4
C67
10uF
25V
C66
10uF
25V
C70
1uF
50V
C68
1uF
50V
C62
1uF
50V
GND2
+12V2
INVSWON
[1,4]
C59
1uF
50V
GND2
D4
ACEFN103-HF
GND2
R48
1.0
1/4W
DRAIN
GD3
BOT_GROUP
[1]