USB HS and SS Switch

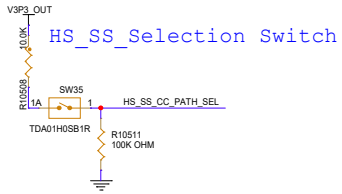

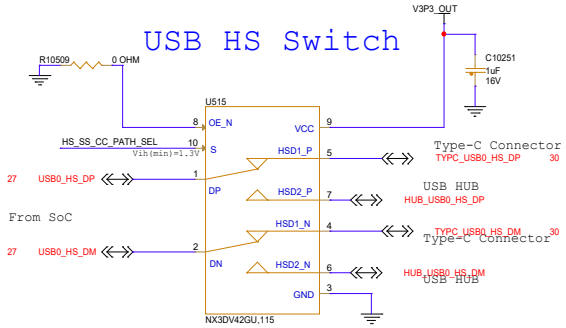

SEL(S)	OE#	FUNCTION
L	L	HSD1+ and HSD1-
H	L	HSD2+ and HSD2-
X	H	SWITCH OFF

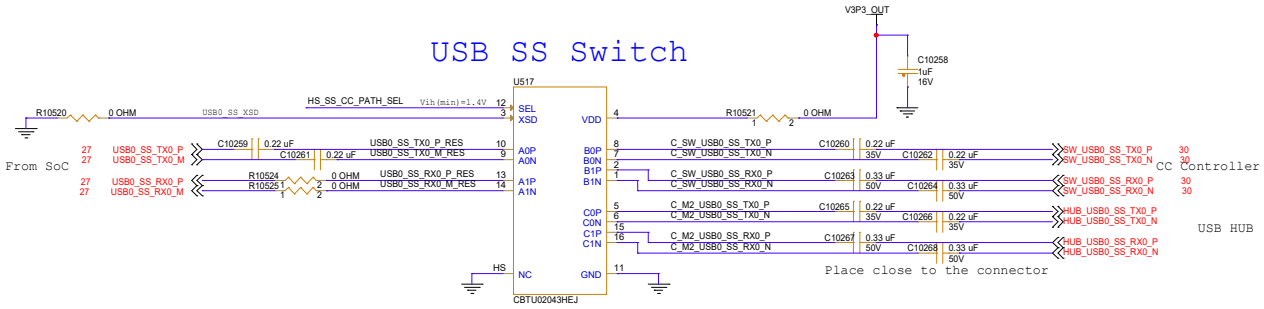

XSD	SEL	FUNCTION
HIGH	X	A, B and C ports are high-Z
LOW	LOW	A to B ports and vice versa
LOW	HIGH	A to C ports and vice versa

Title	USB Switch+Type-C Connector	
Size C	Document Number 24010046-100-030	Rev V1.0
Date: Wednesday, January 08, 2025	Sheet 29 of 31	

CC Controller+Type-C Connector

DRP Controller

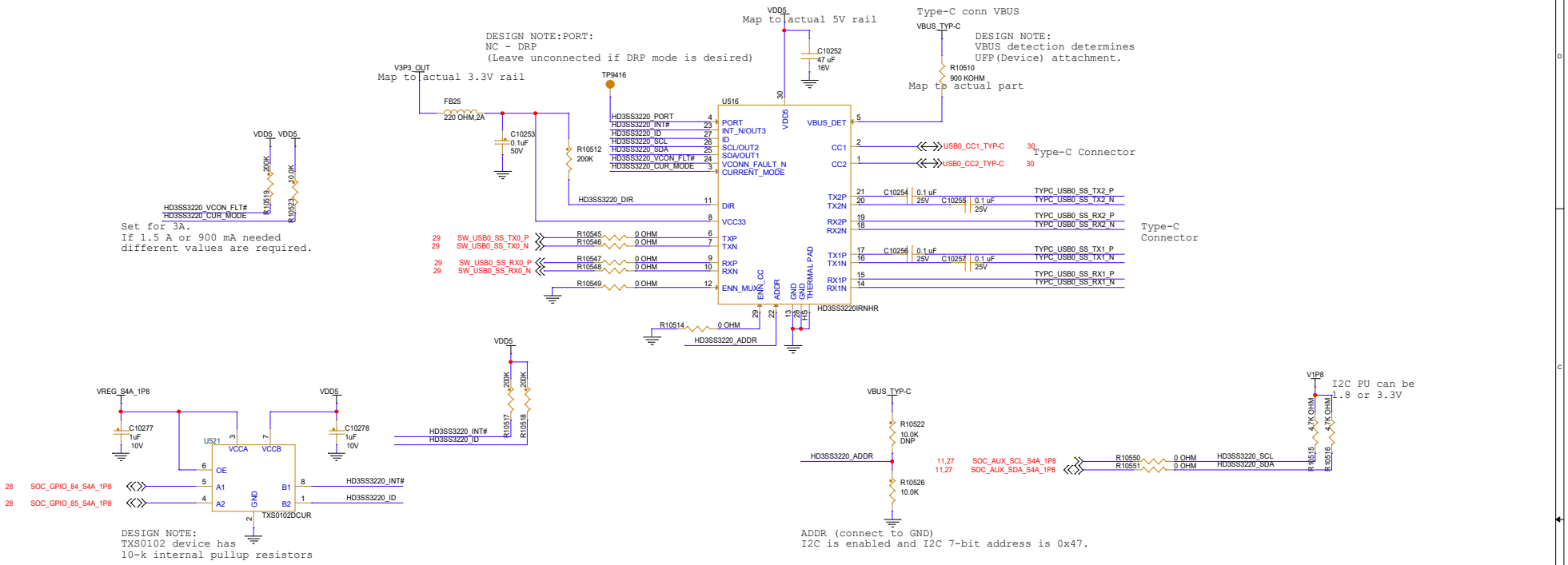

USB Type C connector

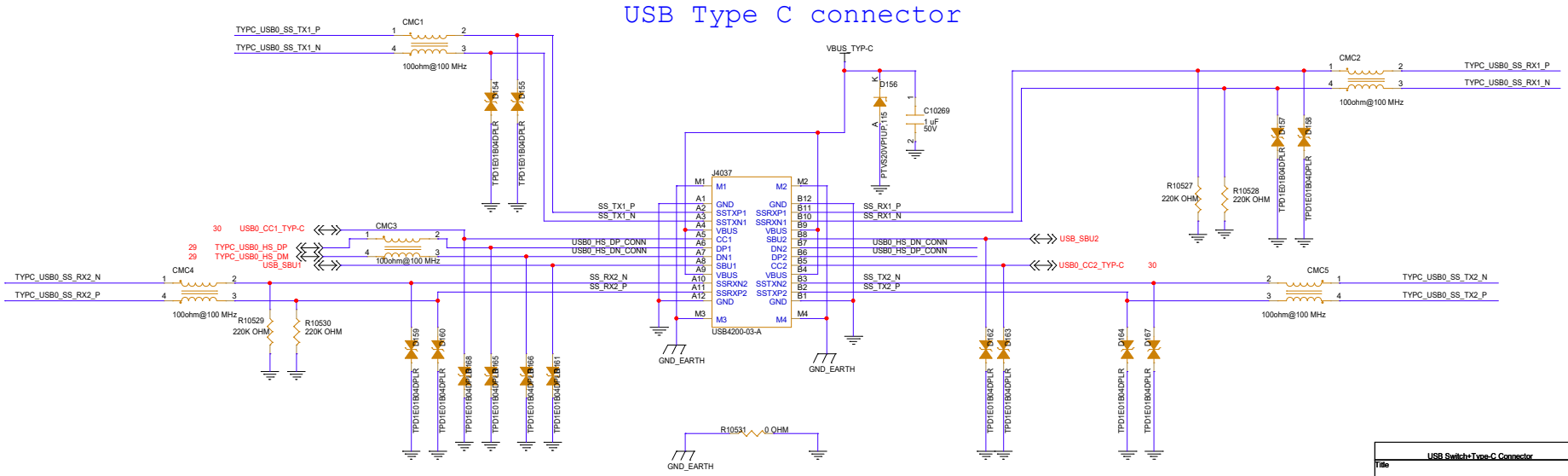

Title	USB Switch+Type-C Connector	
Size C	Document Number 24010046-100-030	Rev V1.0
Date: Wednesday, January 08, 2025	Sheet 30 of 31	