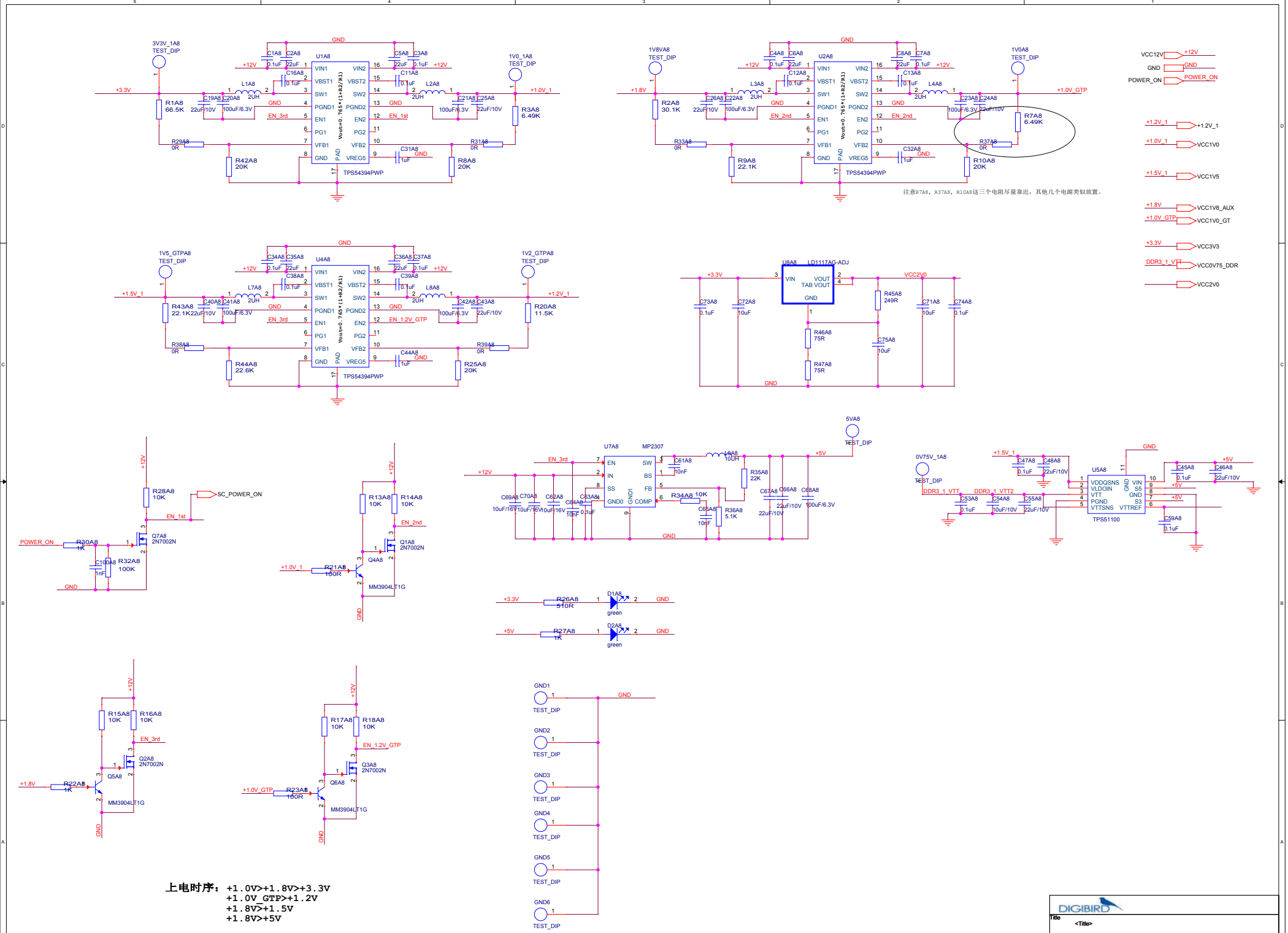

上电时序：+1.0V>+1.8V>+3.3V
+1.0V_GTP>+1.2V
+1.8V>+1.5V
+1.8V>+5V

DIGIBIRD

Title	<Title>	
Size C	Document Description: AE:边埃亮 <Doc>	Rev <RevCode>
Date: Friday, March 04, 2016	Sheet 20 of 20	