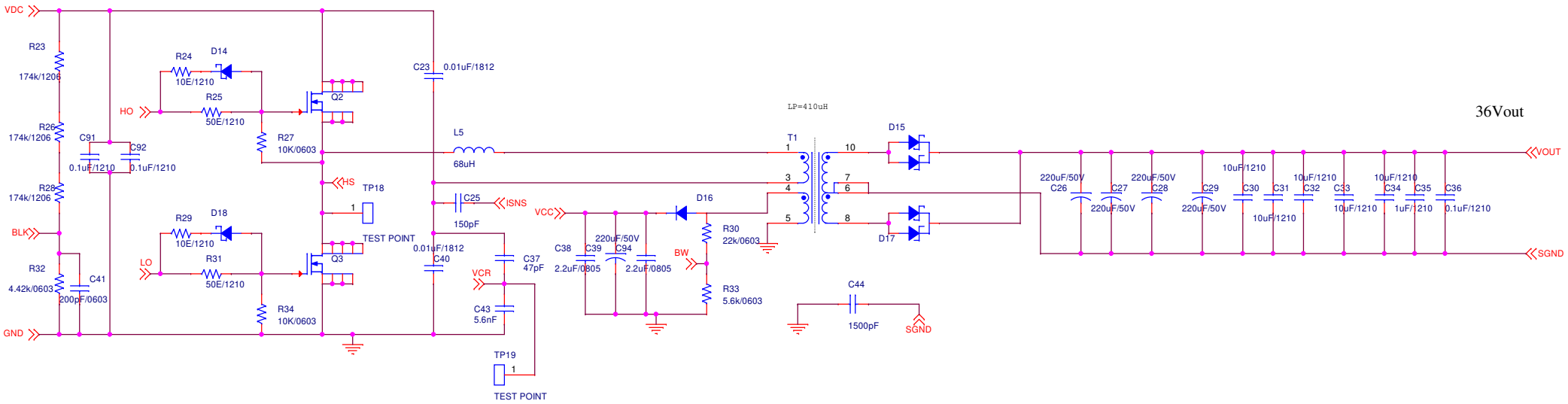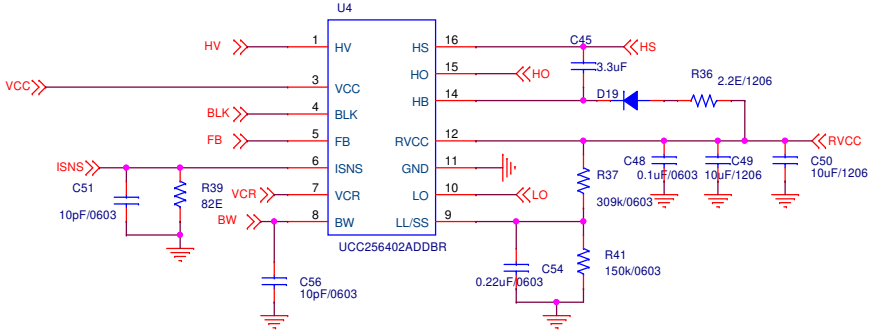LLC RESONANT CONVERTER