03-POWER

DC-DC Buck & Boost Regulator

POWER INPUT:
Input can range from 4.5V to 20V and max power 3A.

POWER OUTPUT:
5V at max 6A

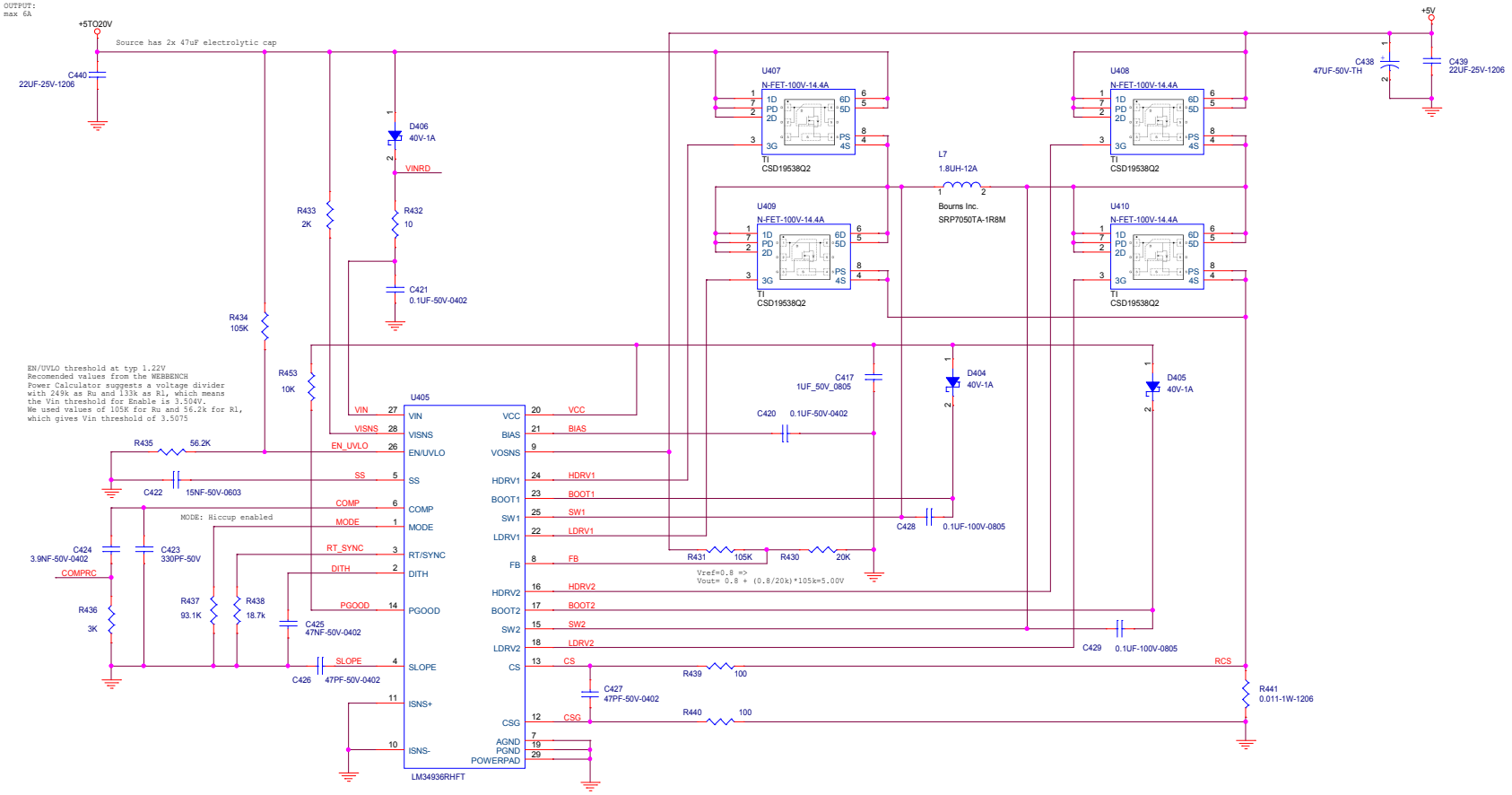

Title	<Title>	
Size C	Document Number <Doc>	Rev A
Date: Tuesday, February 20, 2024	Sheet 3 of 6	