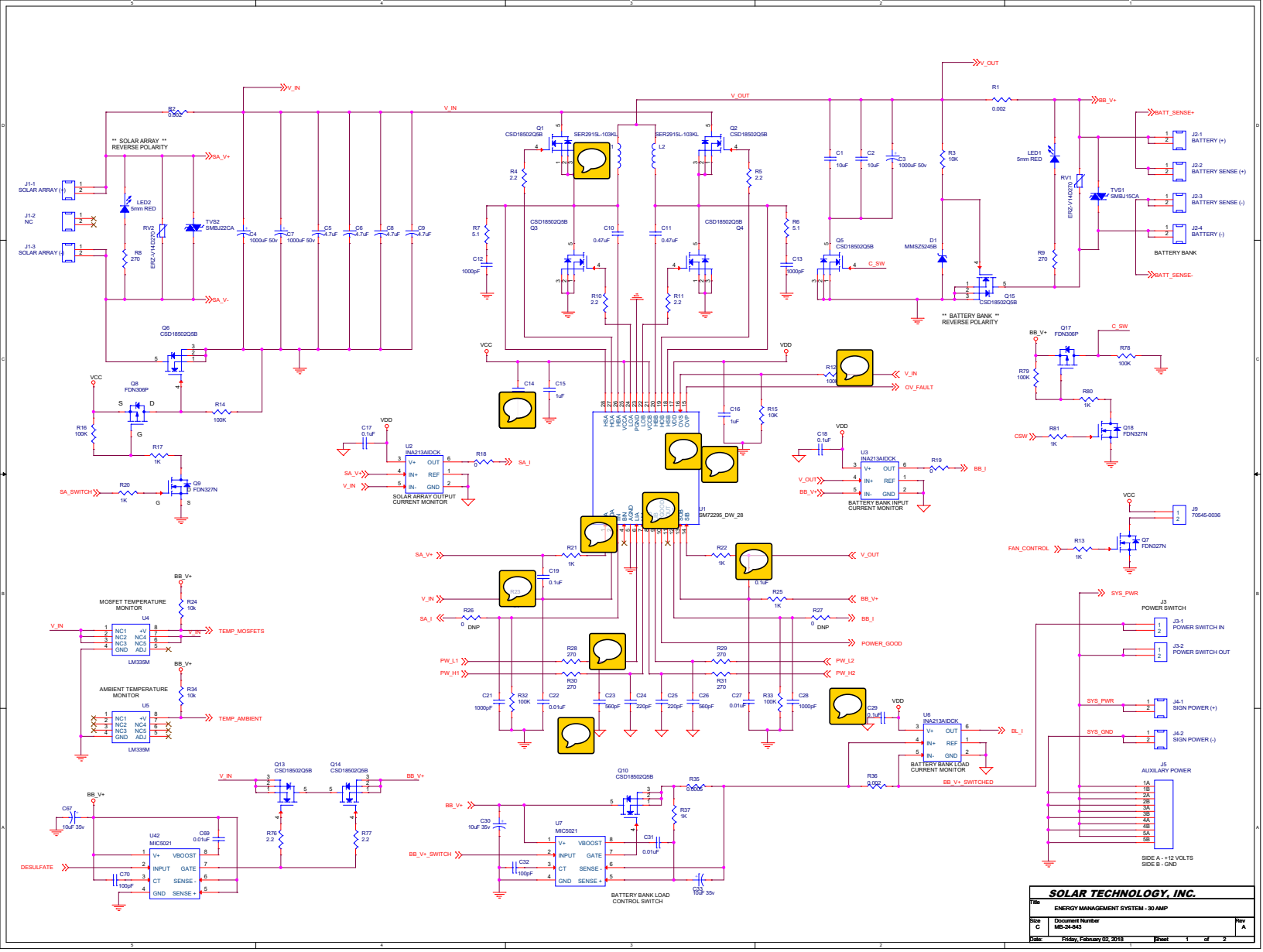
SOLAR TECHNOLOGY, INC.
Title
ENERGY MANAGEMENT SYSTEM - 30 AMP
Size C
Document Number MB-24-843
Rev A
Date: Friday, February 02, 2018
Sheet 1 of 2
** SOLAR ARRAY ** REVERSE POLARITY
** BATTERY BANK ** REVERSE POLARITY
BATTERY BANK
SOLAR ARRAY OUTPUT CURRENT MONITOR
BATTERY BANK INPUT CURRENT MONITOR
BATTERY BANK LOAD CURRENT MONITOR
BATTERY BANK LOAD CONTROL SWITCH
MOSFET TEMPERATURE MONITOR
AMBIENT TEMPERATURE MONITOR
POWER SWITCH
AUXILARY POWER
SIDE A - +12 VOLTS
SIDE B - GND
V_IN
V_OUT
BB_V+
BATT_SENSE+
BATT_SENSE-
SA_V+
SA_V-
SA_I
BB_I
BL_I
C_SW
OV_FAULT
POWER_GOOD
PW_L1
PW_H1
PW_L2
PW_H2
SYS_PWR
SYS_GND
BB_V+_SWITCHED
BB_V+_SWITCH
DESULFATE
SA_SWITCH
FAN_CONTROL
TEMP_MOSFETS
TEMP_AMBIENT
VCC
VDD
J1-1 SOLAR ARRAY (+)
J1-2 NC
J1-3 SOLAR ARRAY (-)
J2-1 BATTERY (+)
J2-2 BATTERY SENSE (+)
J2-3 BATTERY SENSE (-)
J2-4 BATTERY (-)
J3-1 POWER SWITCH IN
J3-2 POWER SWITCH OUT
J4-1 SIGN POWER (+)
J4-2 SIGN POWER (-)
J9 70545-0036
U1 SM72295_DW_28
U2 INA213AIDCK
U3 INA213AIDCK
U4 LM335M
U5 LM335M
U6 INA213AIDCK
U7 MIC5021
U42 MIC5021
Q1 CSD18502Q5B
Q2 CSD18502Q5B
Q3 CSD18502Q5B
Q4 CSD18502Q5B
Q5 CSD18502Q5B
Q6 CSD18502Q5B
Q7 FDN327N
Q8 FDN306P
Q9 FDN327N
Q10 CSD18502Q5B
Q13 CSD18502Q5B
Q14 CSD18502Q5B
Q15 CSD18502Q5B
Q17 FDN306P
Q18 FDN327N
D1 MMSZ5245B
LED1 5mm RED
LED2 5mm RED
RV1 ERZ-V14D270
RV2 ERZ-V14D220
TVS1 SMBJ15CA
TVS2 SMBJ22CA
L2 SER2915L-103KL