USB Impedance 90 ohm

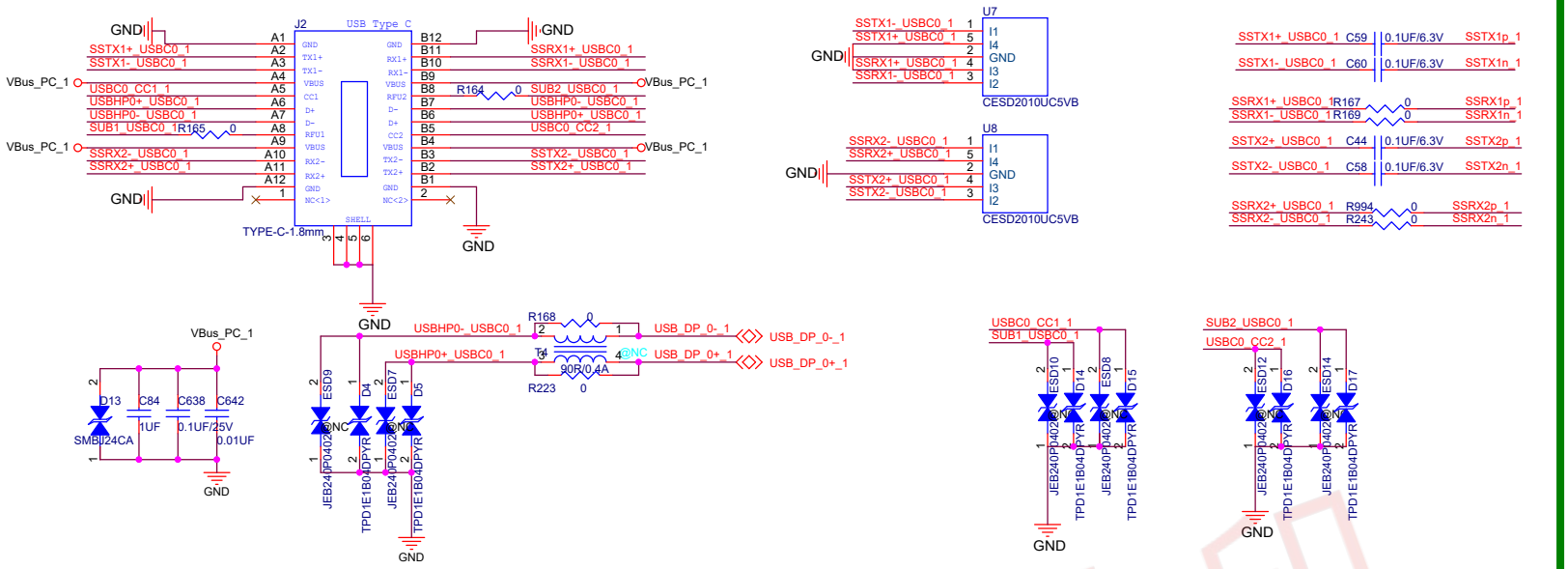

USB CC Single

USB3.0 Impedance 85 ohm

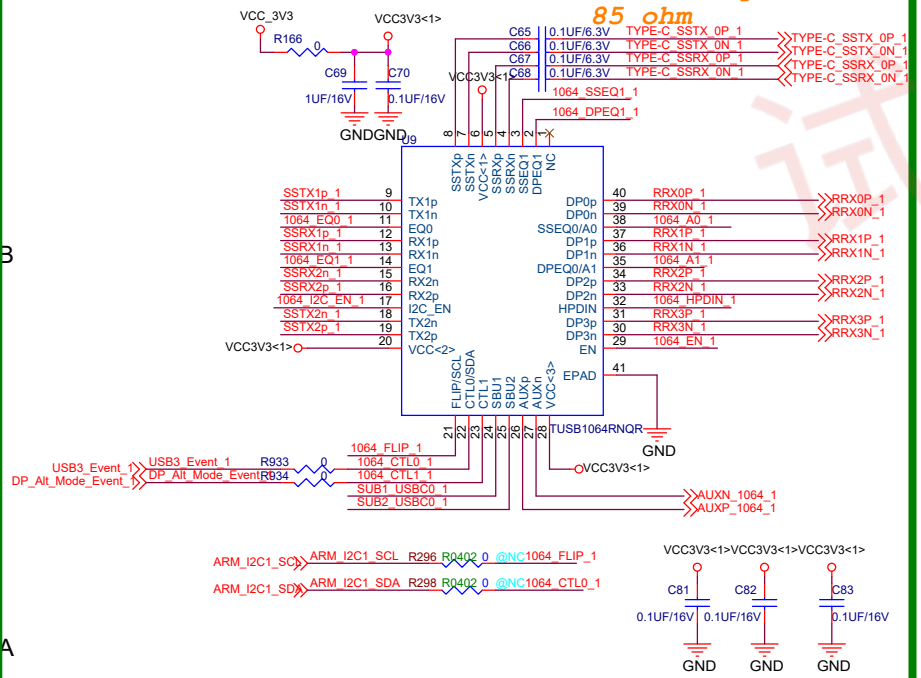

TUSB1064 CONFIG

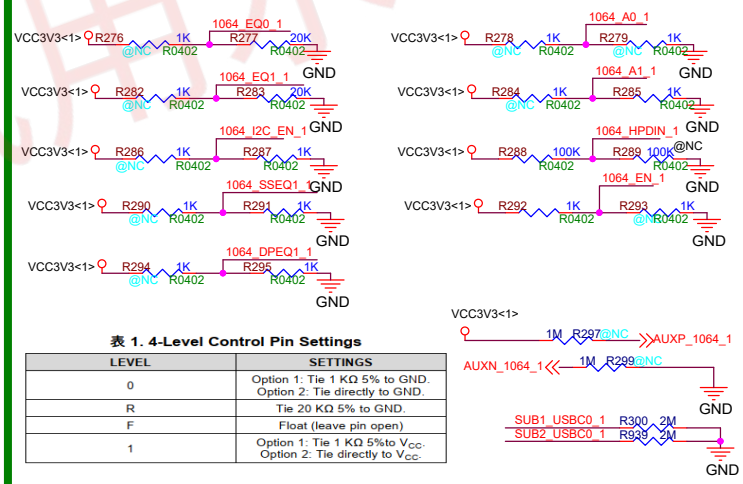

表 1. 4-Level Control Pin Settings

LEVEL	SETTINGS
0	Option 1: Tie 1 KΩ 5% to GND. Option 2: Tie directly to GND.
R	Tie 20 KΩ 5% to GND.
F	Float (leave pin open)
1	Option 1: Tie 1 KΩ 5%to V_{CC}. Option 2: Tie directly to V_{CC}.

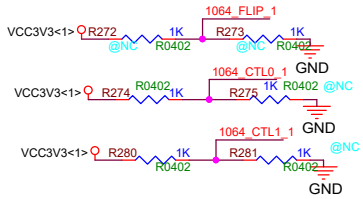

CTL1 PIN	CTL0 PIN	FLIP PIN	CONFIGURATION	VESA DisplayPort ALT MODE UFP_D CONFIGURATION
L	L	L	Power Down	—
L	L	H	Power Down	—
L	H	L	One Port USB 3.1 - No Flip	—
L	H	H	One Port USB 3.1 – With Flip	—
H	L	L	4 Lane DP - No Flip	C
H	L	H	4 Lane DP – With Flip	C
H	H	L	One Port USB 3.1 + 2 Lane DP- No Flip	D
H	H	H	One Port USB 3.1 + 2 Lane DP– With Flip	D

试用水印

USB2.0 Impedance 90 ohm
USB3.0 Impedance 85 ohm

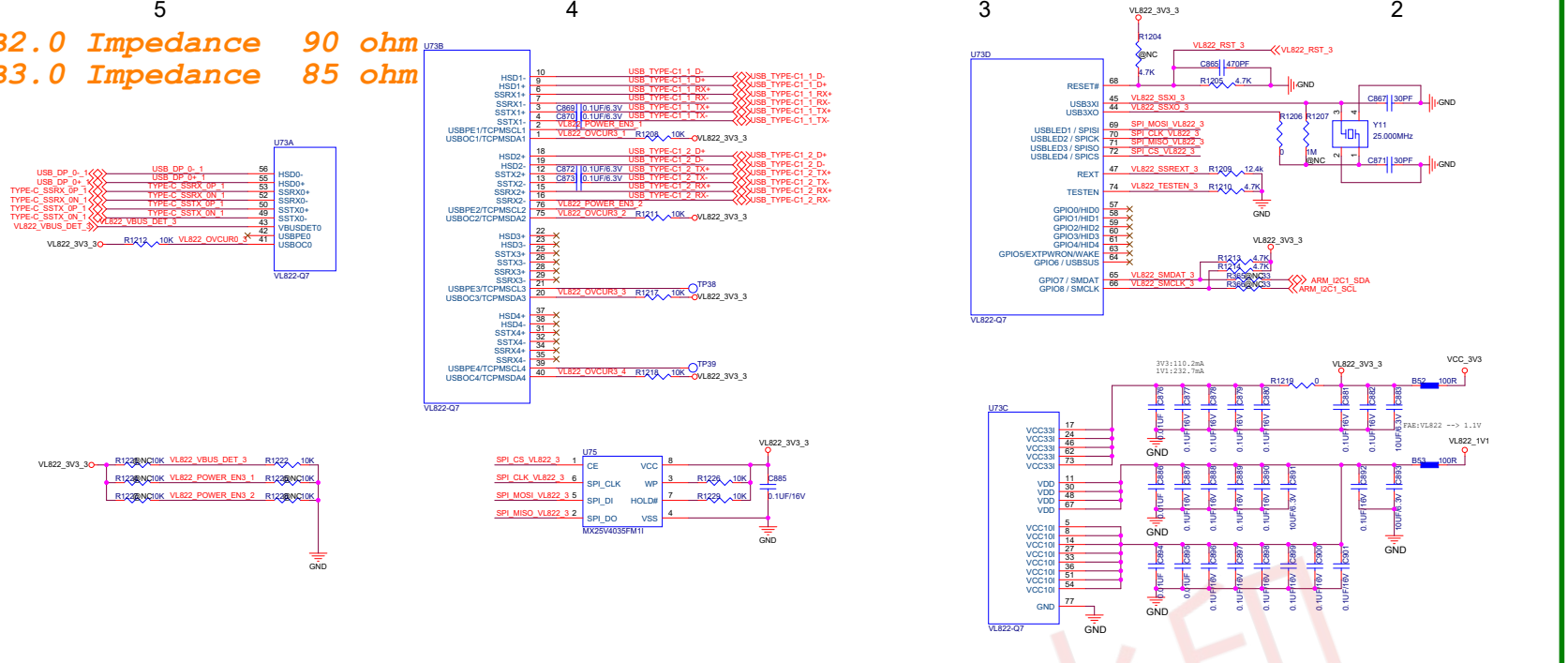

USB2.0 Impedance 90 ohm
USB3.0 Impedance 85 ohm

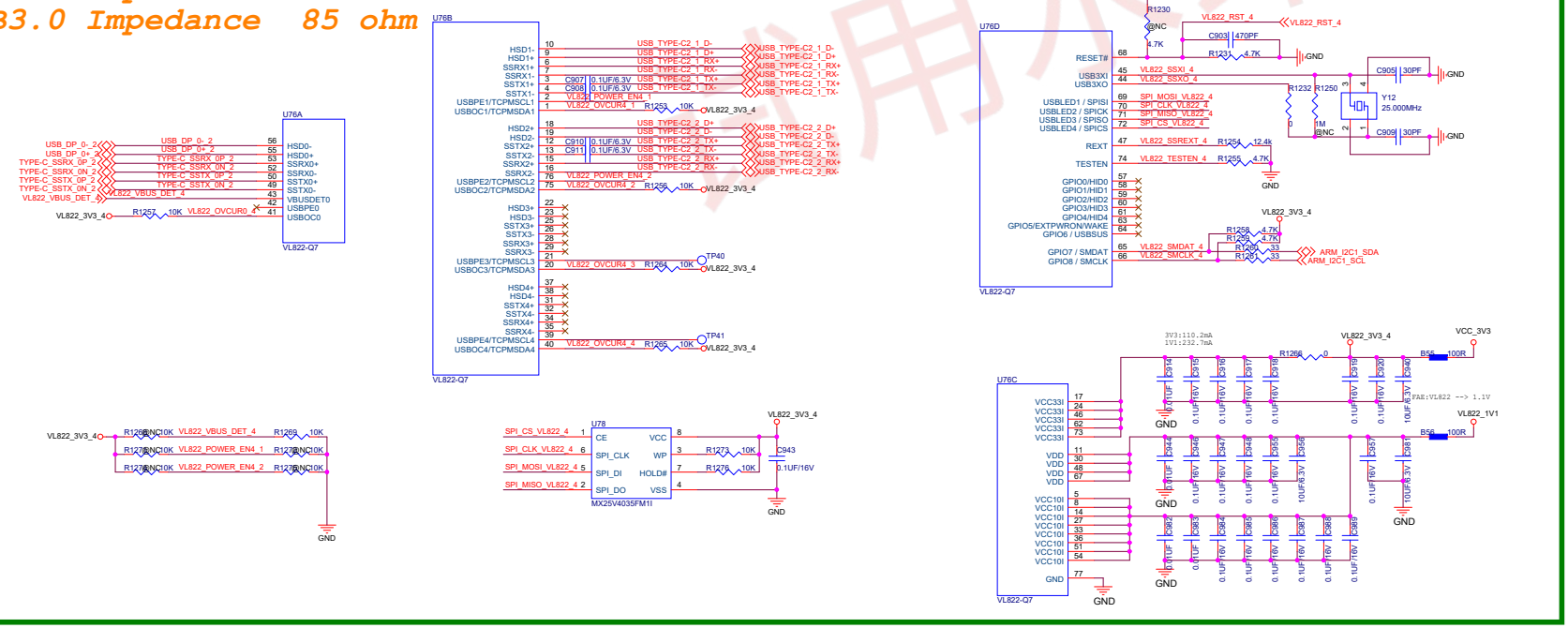

樣用水印

USBC IN [UFP/USB DFP TX0/CONFIG]

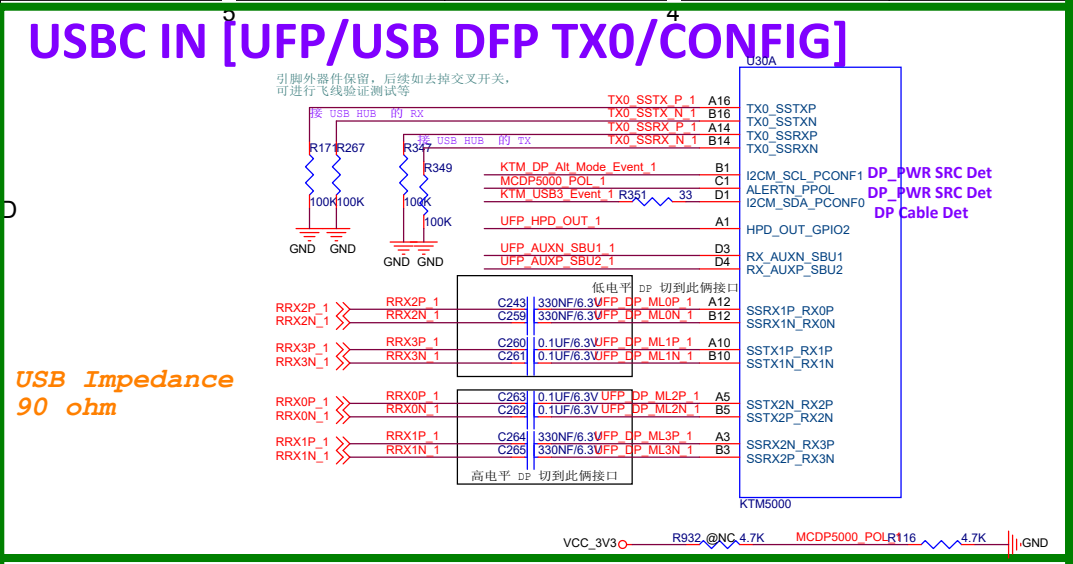

[DFP HDMI AC Coupled (TX3), VML]

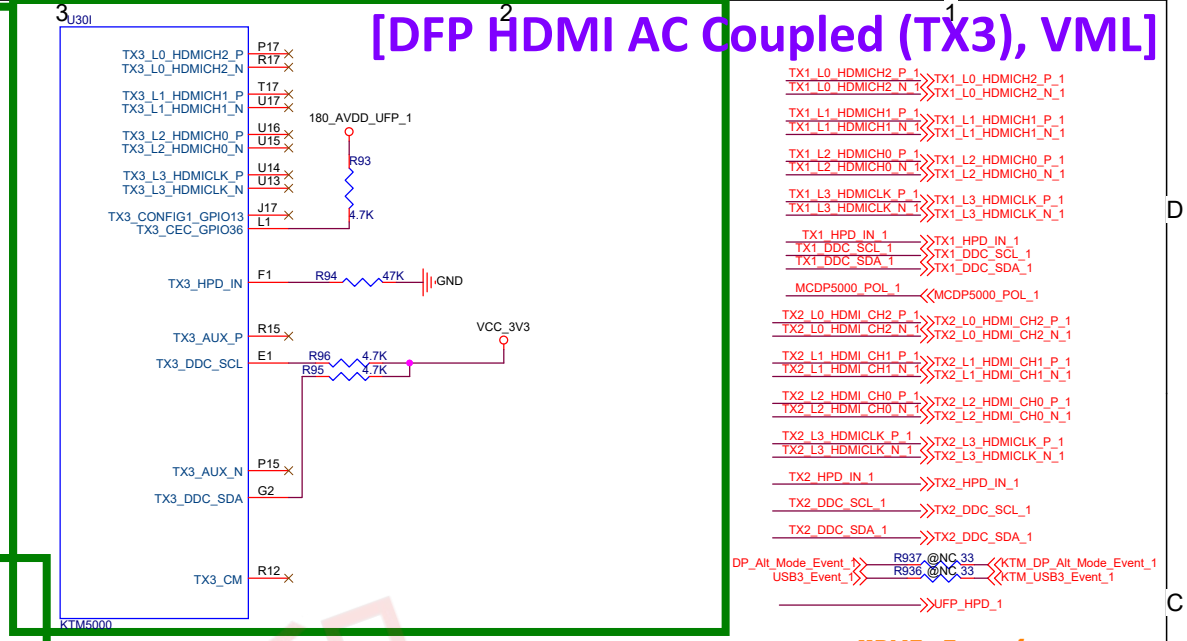

[DFP DP++ (TX1), VML]

HDMI Impedance
100 ohm

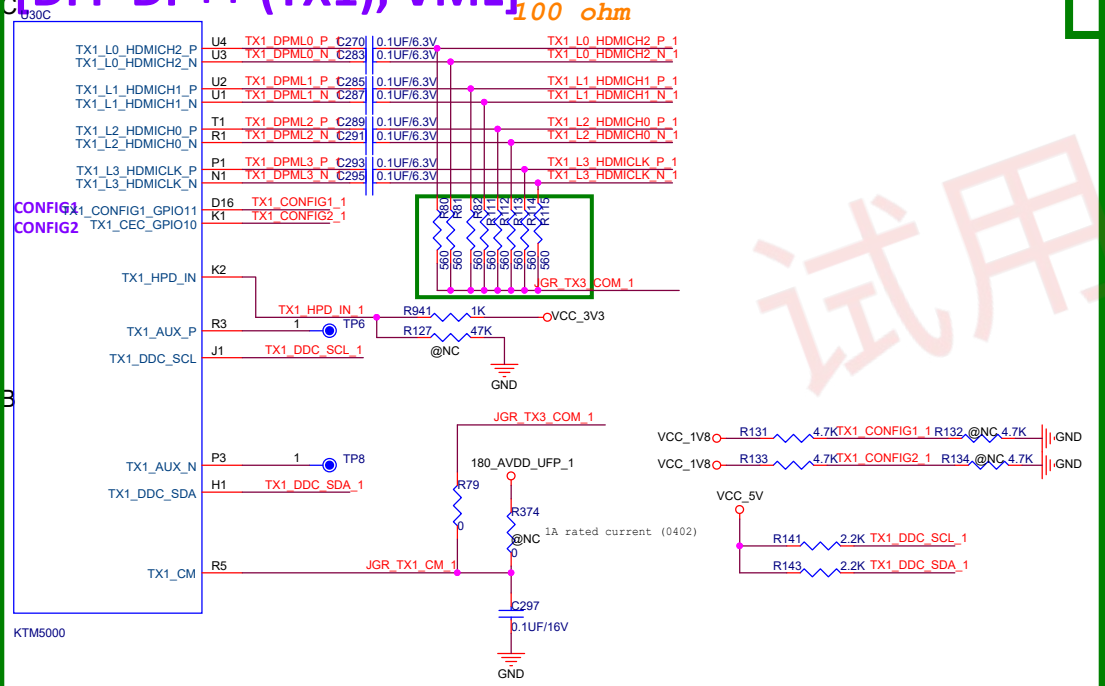

[DFP HDMI DC Coupled (TX2), CML]

HDMI Impedance
100 ohm

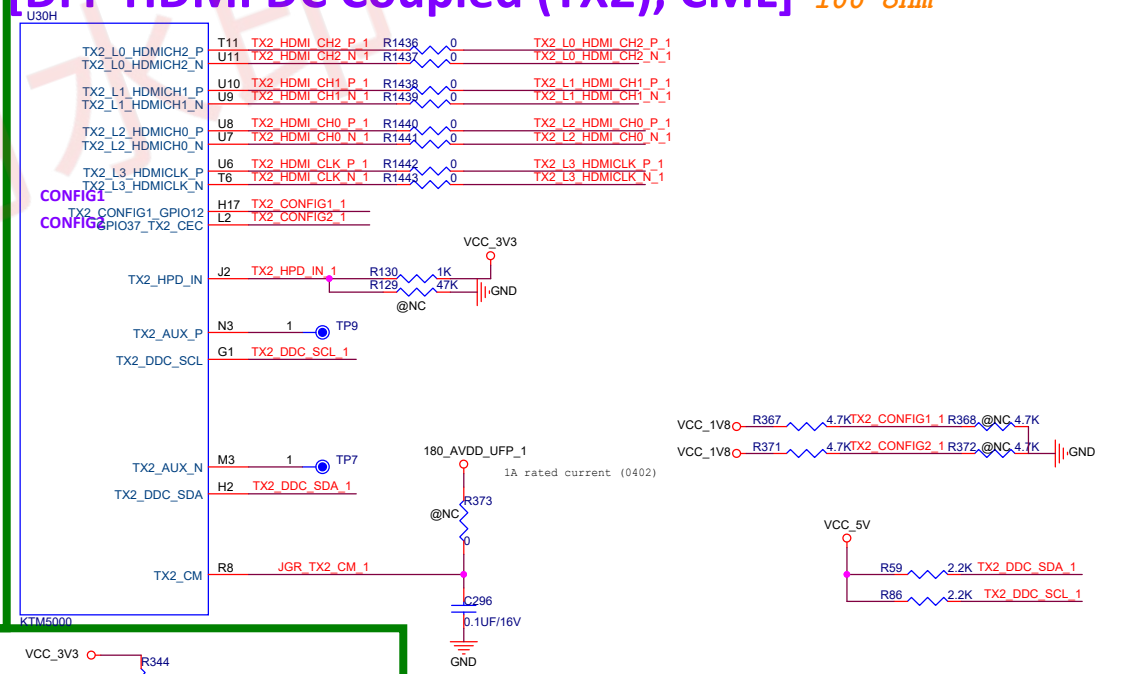

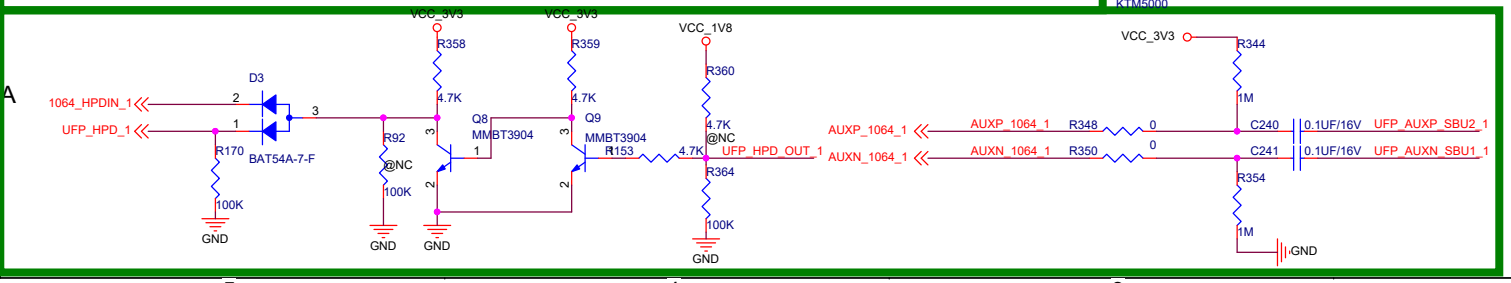

试用水印