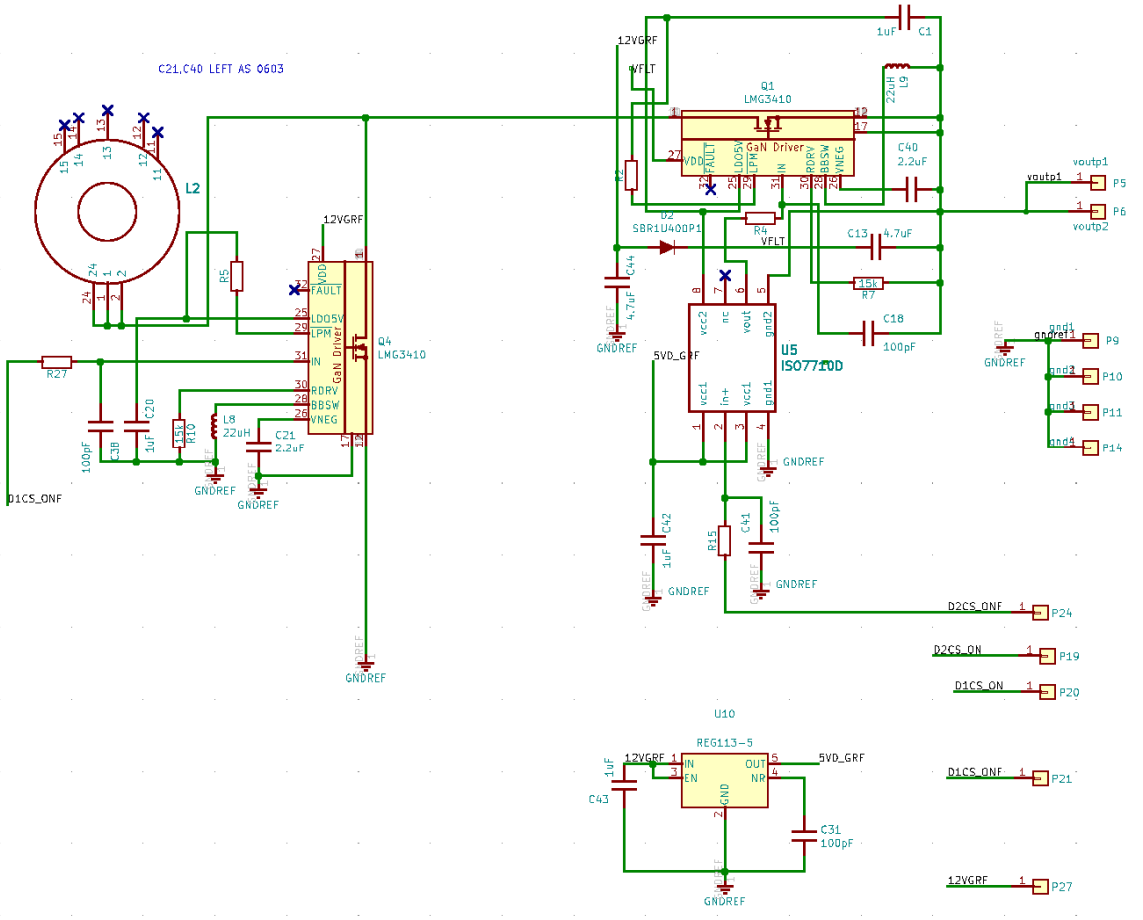BULK OUTPUT CAPS ARE ON MAIN BOARD. FIRST ONE HAS AMOBEAD