Power sequence

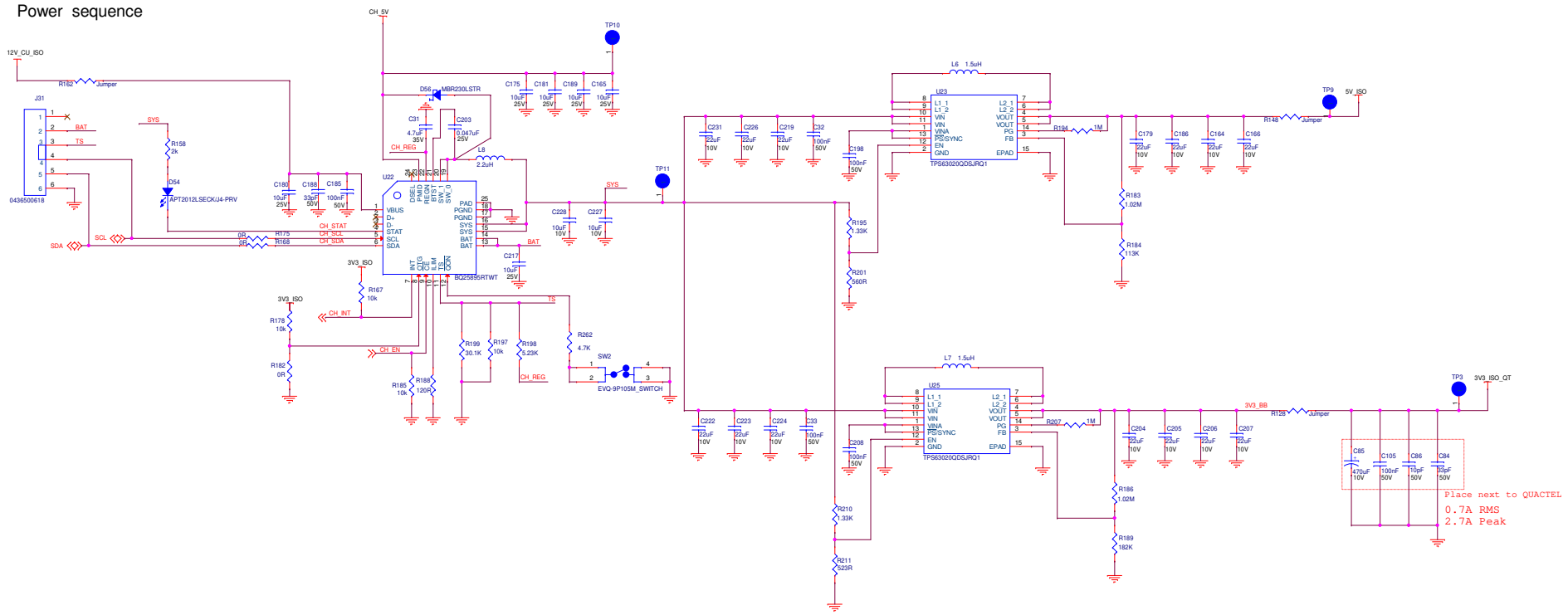

ELECTROON
CHARGING THE WAY FORWARD

All Rights Reserved.
This schematic is the property of Electroon and may not be used in whole or in part without authorised permission.

Design: CU_GENERIC				
Draw Name: 02 POWER2				Rev: 02
	Drawn By	Developed By	Approved By	
Name:	V.L	V.L	A.V.	Sheet 3
Date:	20/05/2020	20/05/2020	25/05/2020	Of 9
Date:	Thursday, January 14, 2021			