SCH- PFC SETION

1)Supply (Pri_15V with respect to PGND) comes from control card

2)PGND is shorted to 400V bus ground

3)PFC driver(ucc27511aQ) and PFC IC(ucc28180D) ground refernce is AGND

4) AGND and PGND are shorted throgh a 0 ohm resistor

5) All below pictures are showing the PFC layout which includes 4 layers indicated with arrow

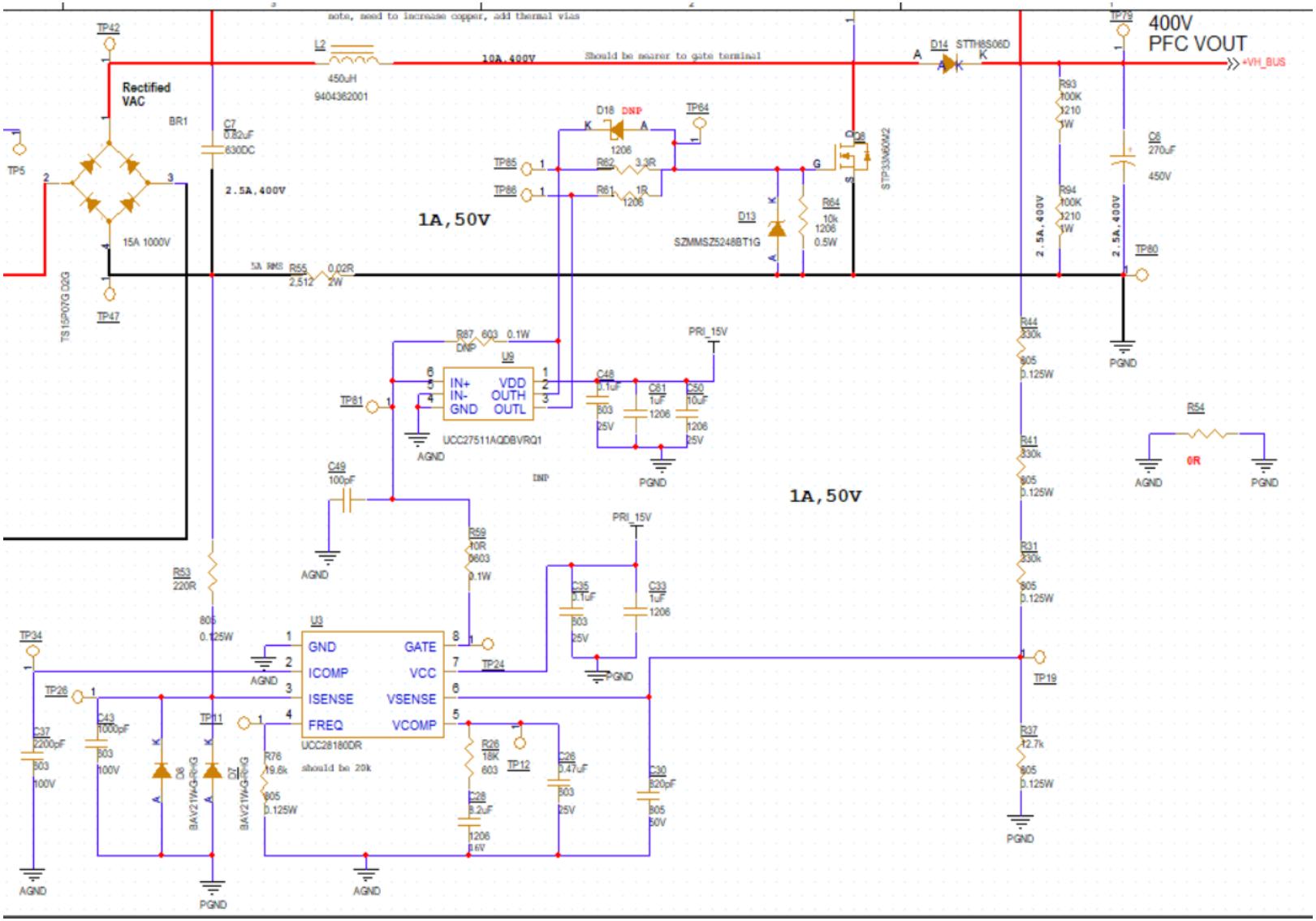

note, need to increase copper, add thermal vias
400V
PFC VOUT
+VH_BUS
Should be nearer to gate terminal
10A,400V
2.5A,400V
1A,50V
1A,50V
Rectified
VAC
15A 1000V
TS15P07G D2G
BR1
L2
450uH
9404362001
C7
0.82uF
630DC
D14
STTH8S06D
D18
DNP
1206
R62
3.3R
R61
1R
1206
Q8
STP33N60M2
D13
SZMMSZ5248BT1G
R64
10k
1206
0.5W
R93
100K
1210
1W
R94
100K
1210
1W
C8
270uF
450V
R55
2,512
0.02R
2W
5A RMS
R87
603
0.1W
DNP
U9
IN+
IN-
GND
VDD
OUTH
OUTL
UCC27511AQDBVRQ1
C48
0.1uF
603
25V
C61
1uF
1206
C50
10uF
1206
25V
PRI_15V
AGND
PGND
C49
100pF
R59
10R
0603
0.1W
R53
220R
805
0.125W
U3
GND
ICOMP
ISENSE
FREQ
GATE
VCC
VSENSE
VCOMP
UCC28180DR
should be 20k
C35
0.1uF
603
25V
C33
1uF
1206
R26
18K
603
C28
8.2uF
1206
16V
C26
0.47uF
603
25V
C30
820pF
805
50V
R76
19.6k
805
0.125W
C37
2200pF
603
100V
C43
1000pF
603
100V
D8
BAV21W-G-RHG
D7
BAV21W-G-RHG
R44
330k
805
0.125W
R41
330k
805
0.125W
R31
330k
805
0.125W
R37
12.7k
805
0.125W
R54
0R
TP42
TP5
TP47
TP79
TP80
TP81
TP24
TP19
TP34
TP26
TP11
TP12
TP64
TP85
TP86

GATE SIGNAL

PFC CONTROLLER

PFC –TOP(L1-RED) & BOTTOM(L4-BLUE)

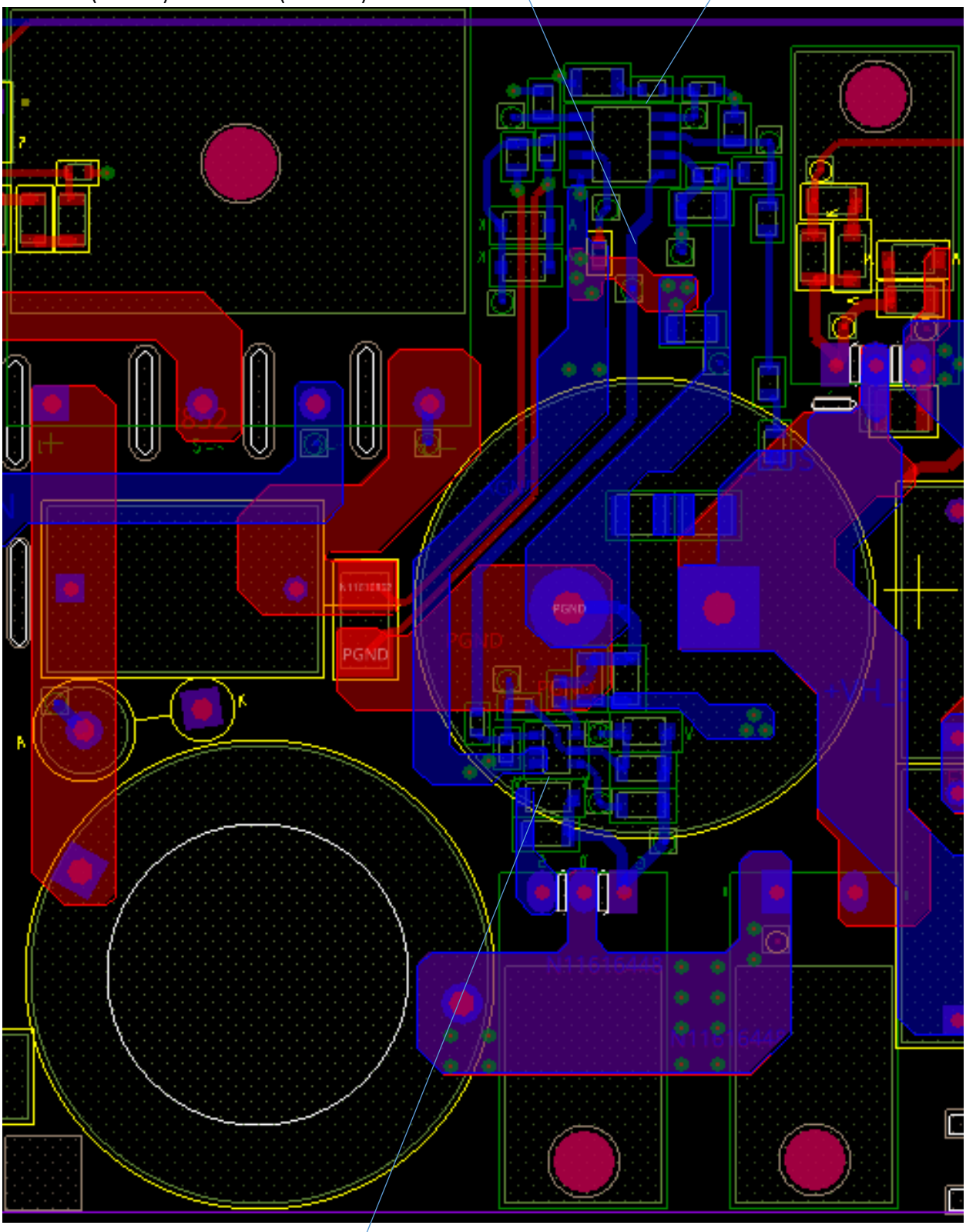

GATE DRIVER IC

PFC –TOP(L1-RED) & GND(L2-GREEN)

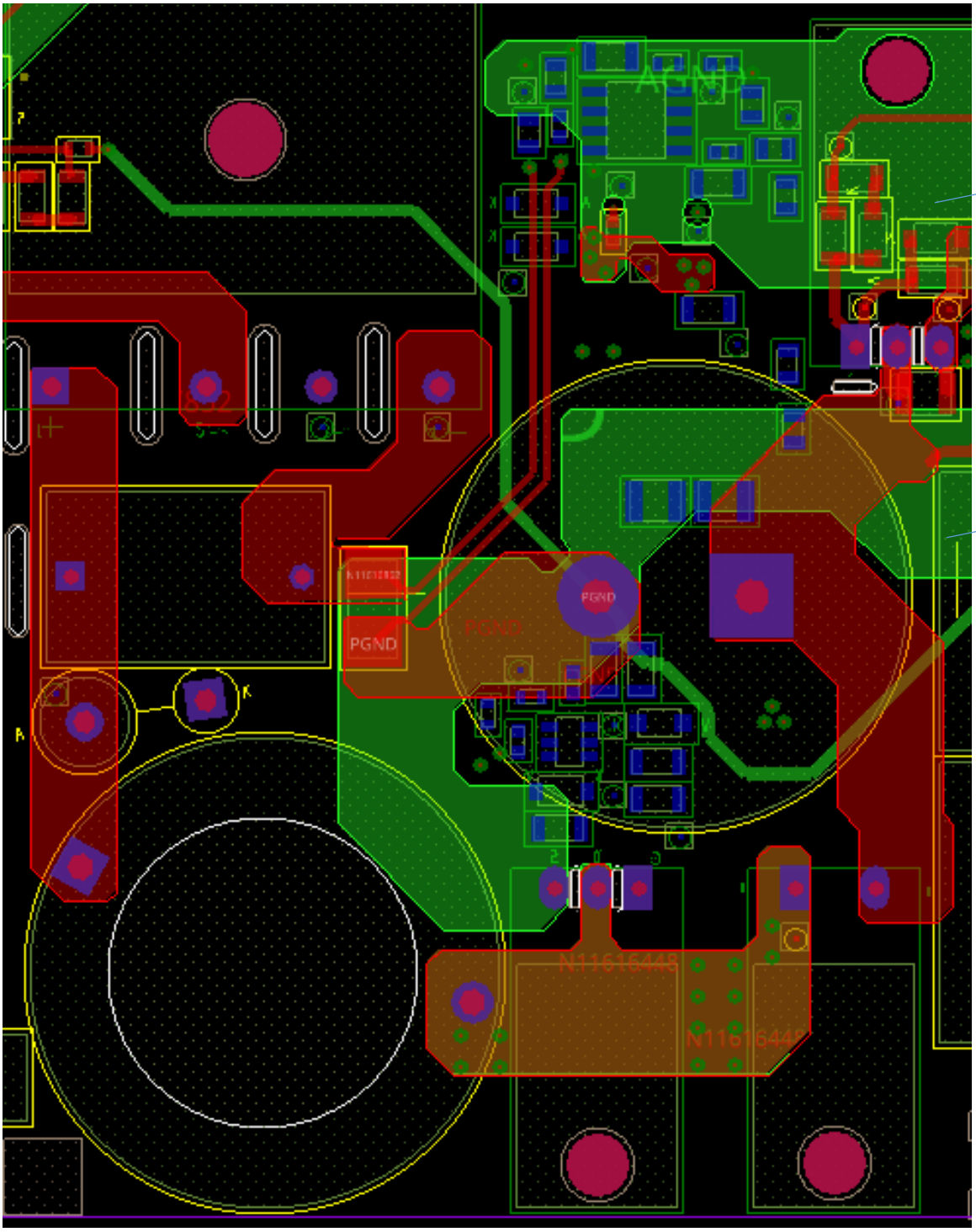

AGND

PFC –TOP(L1-RED) & POWER(L3-YELLOW)

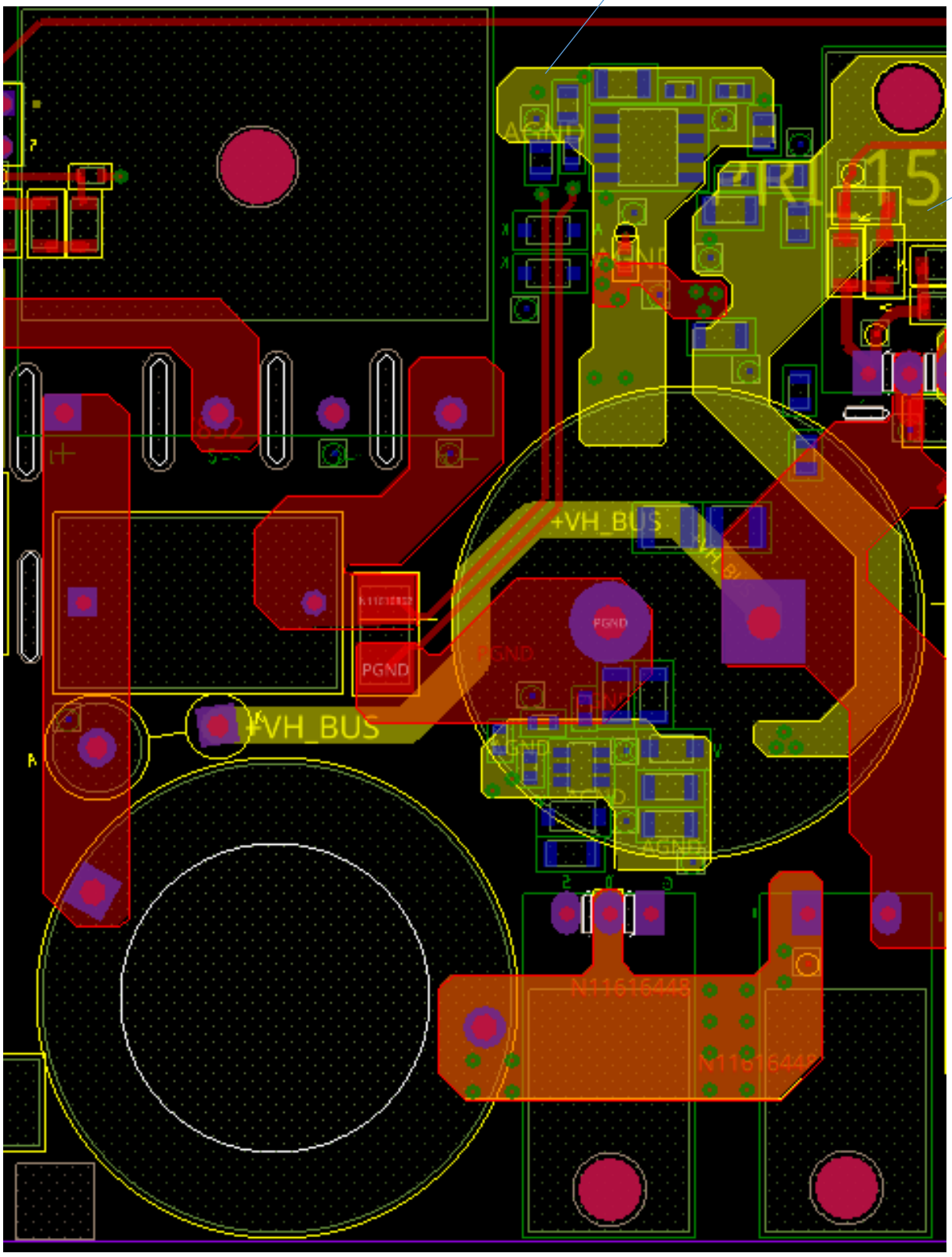

PFC (L1-TOP LAYER)

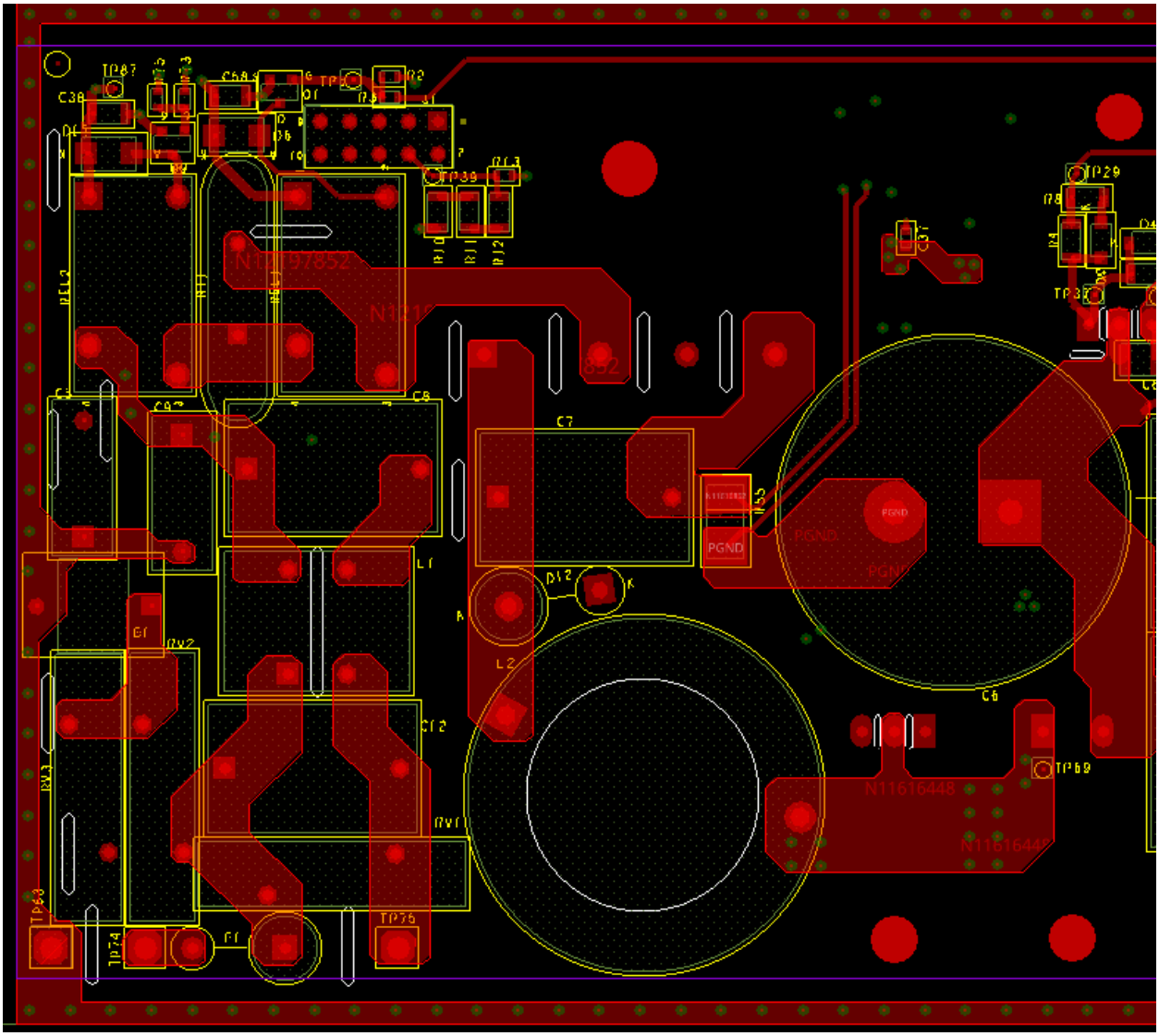
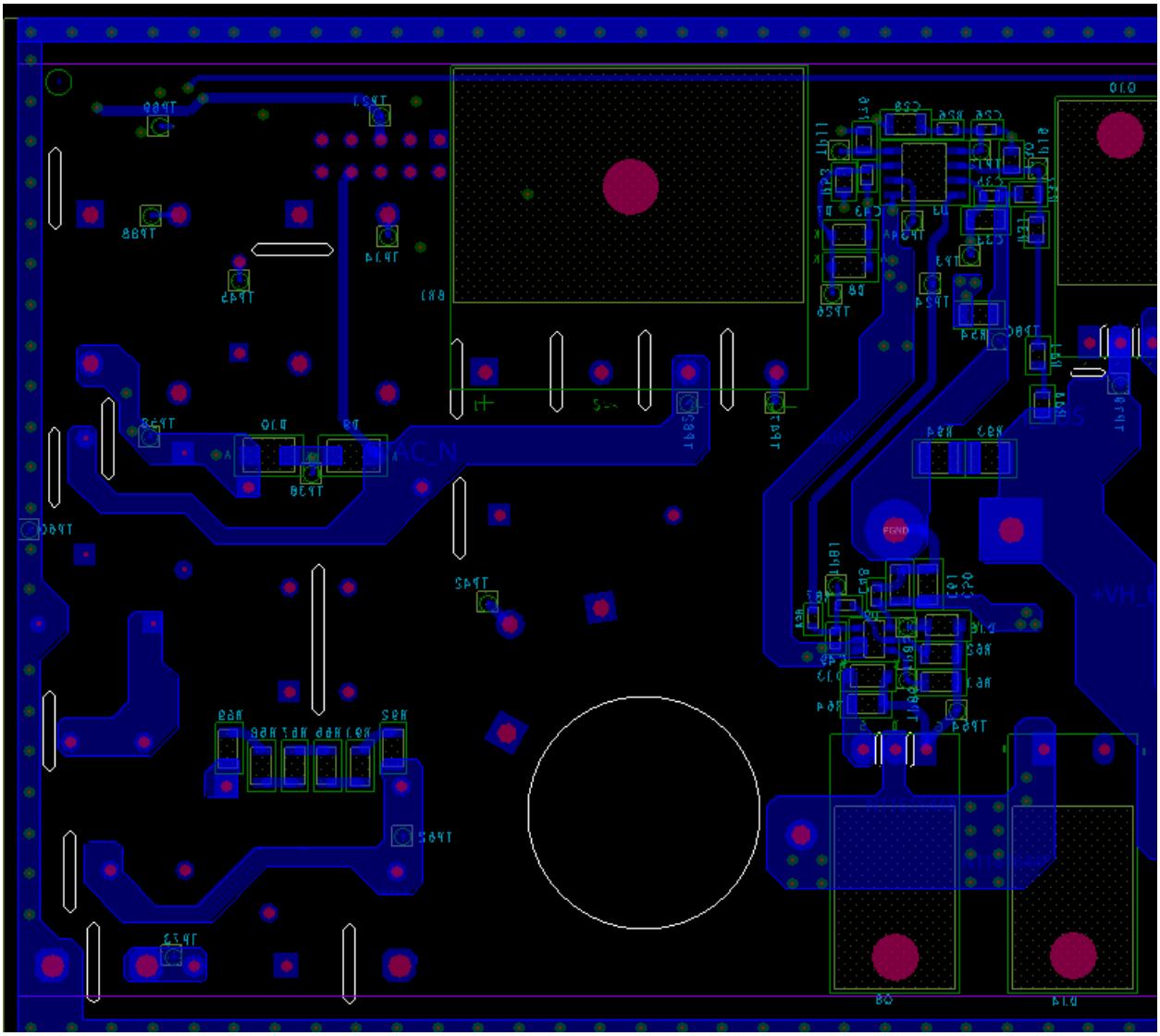
PFC (L4-BOTTOM LAYER)