REVISION RECORD			
LTR	ECO NO:	APPROVED:	DATE:

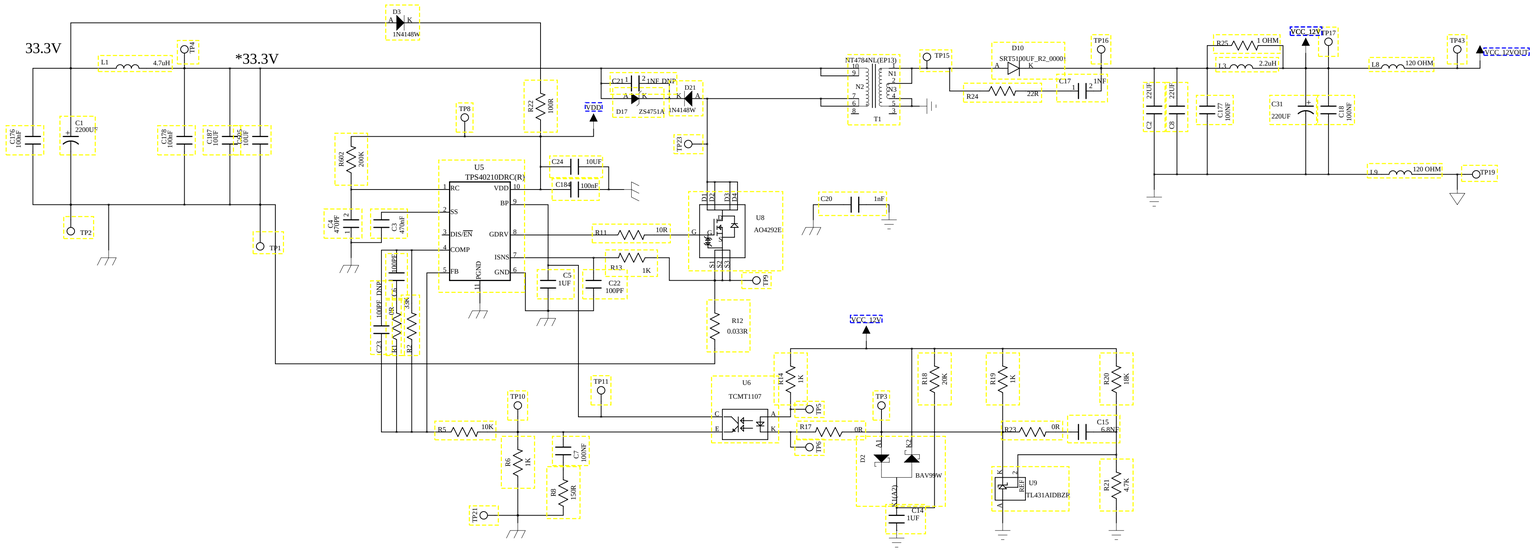

DRAWN: <Drawn By>	DATED: 2/13/2020	COMPANY: [redacted]	
		TITLE: [redacted]	
CHECKED: <Checked By>	DATED: <Checked Date>	CODE: [redacted]	SIZE: [redacted]
QUALITY CONTROL: <QC By>	DATED: <QC Date>	DRAWING NO: [redacted]	REV: [redacted]
RELEASED: <Released By>	DATED: <Release Date>	SCALE: <Scale>	SHEET: 2 OF 2