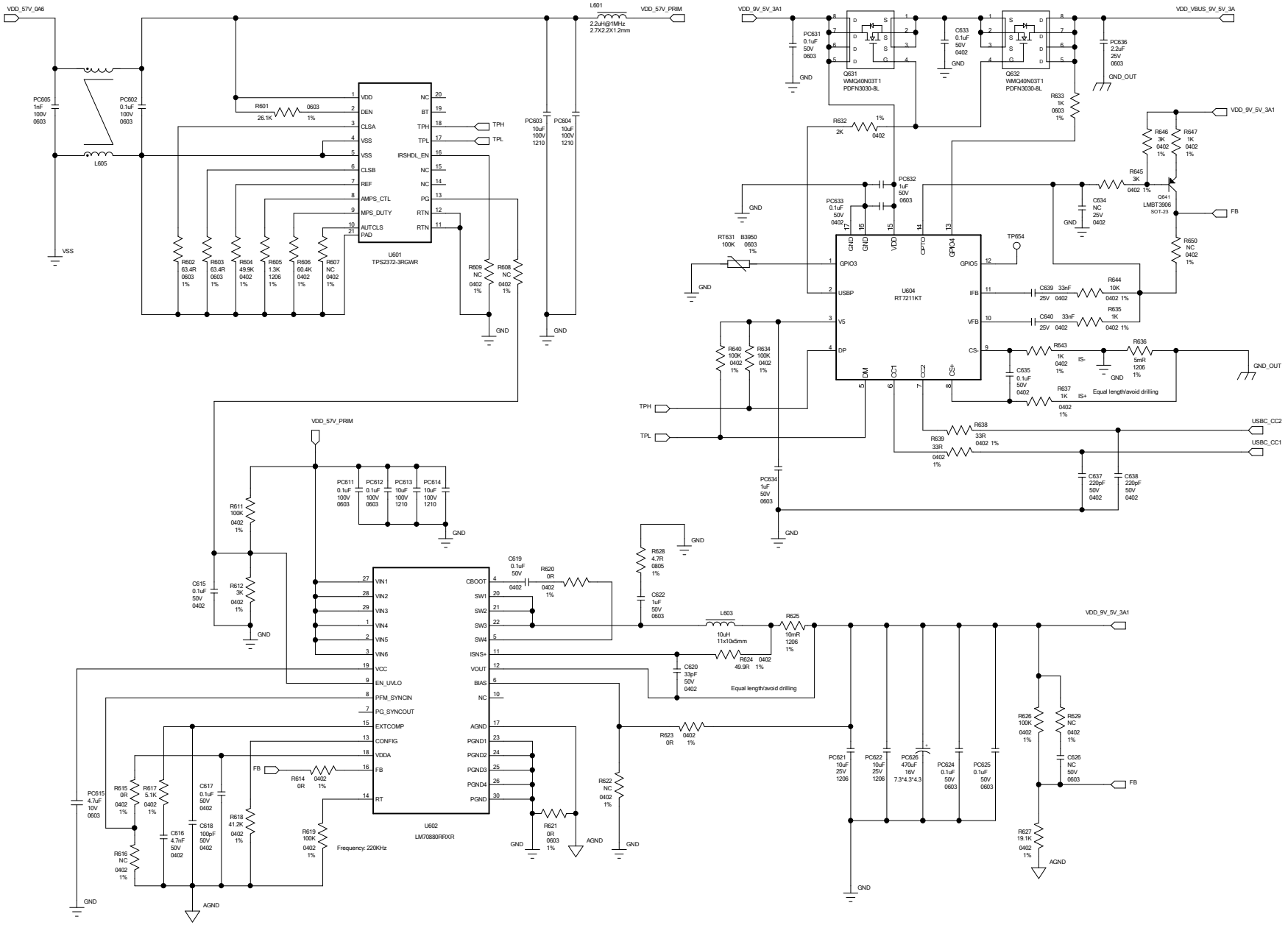

DRAWN: Bo.Yang	DATED: 2025-05-23	COMPANY: SHENZHEN HONOR ELECTRONIC CO.,LTD.	
CHECKED: Car	DATED: 2025-05-23	TITLE: POE V2	
RELEASED: Alan	DATED: 2025-05-23	DRAWING NO: xxxx	REV: 09
SIZE: C		SHEET: 1 OF 1	

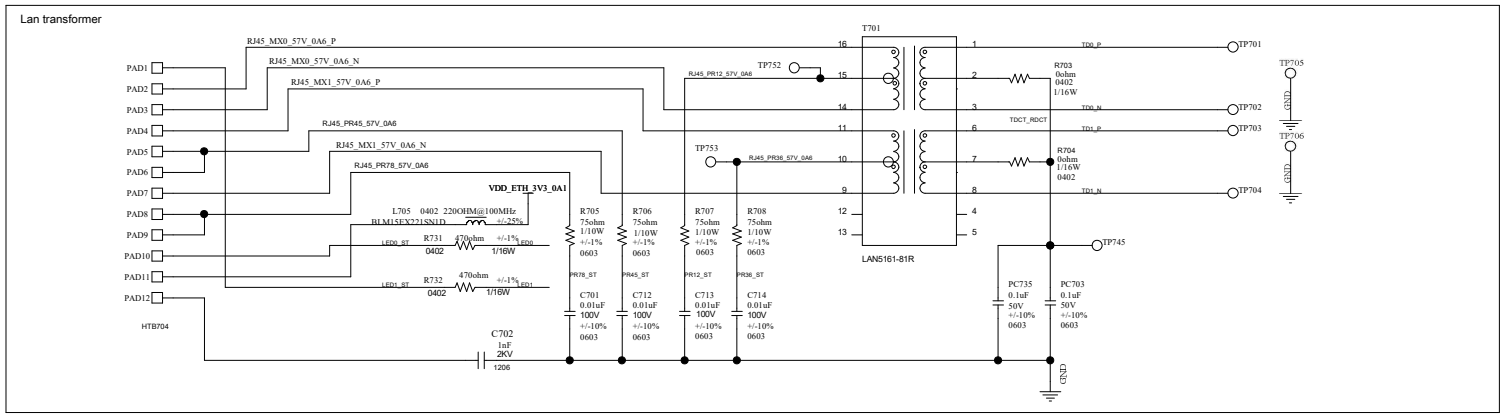

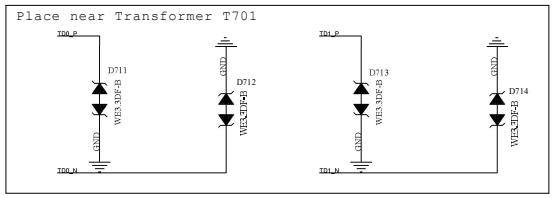

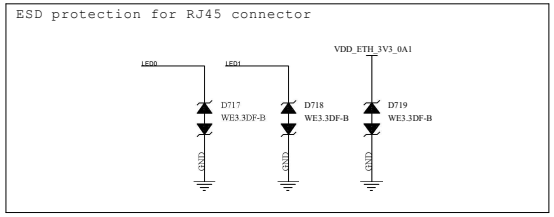

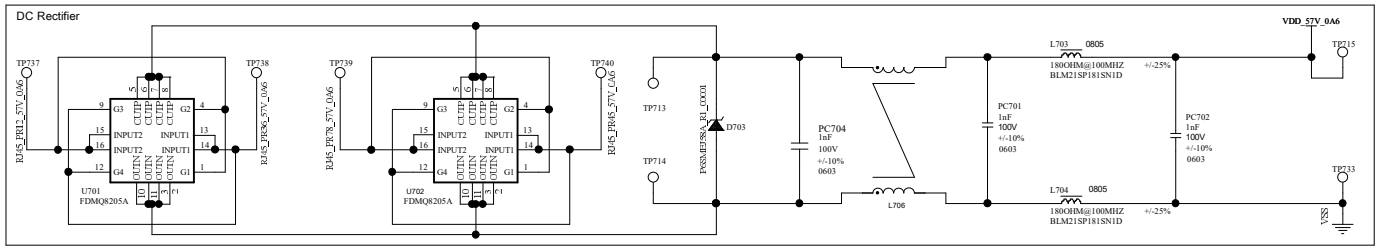

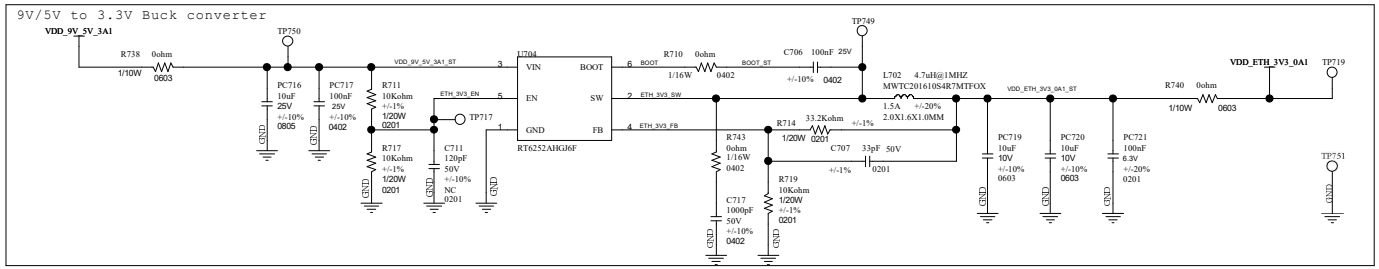

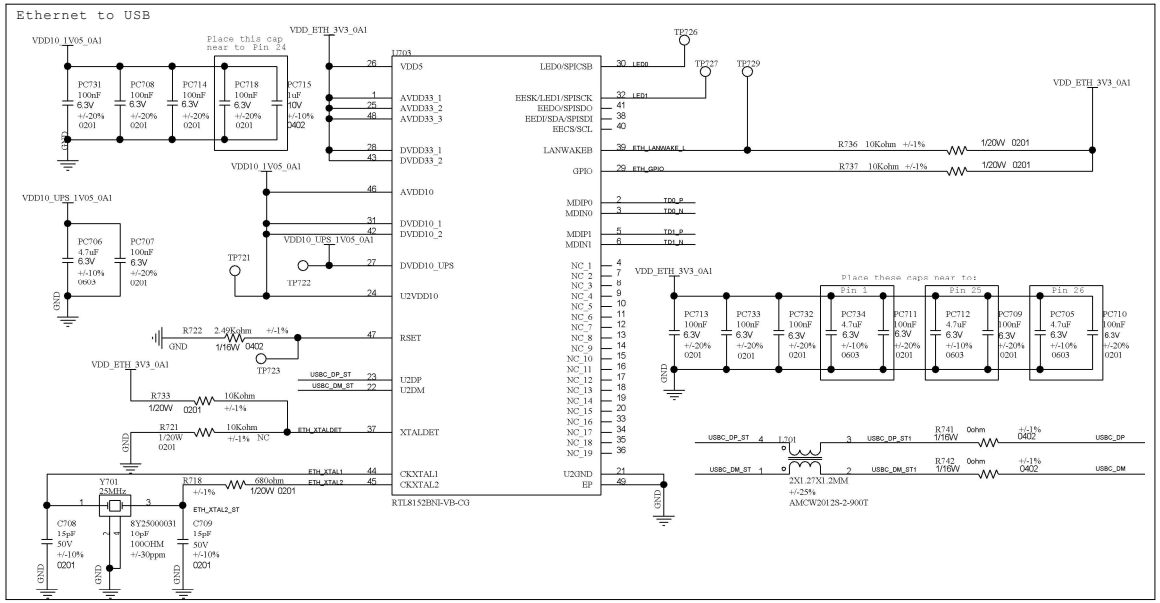

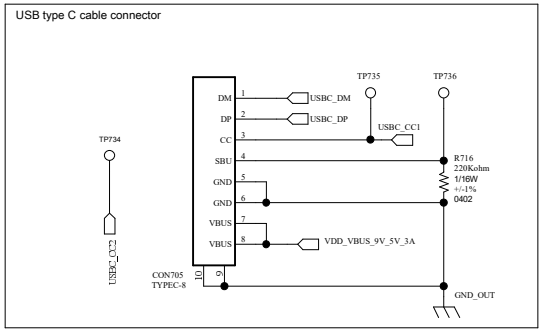

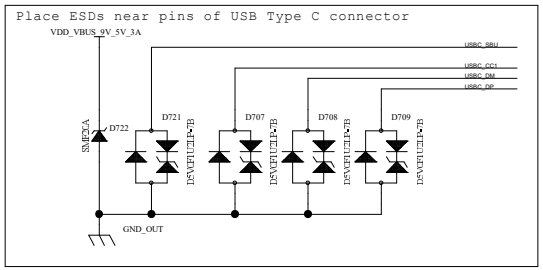

Ring Confidential

Title	07_Power Source - DC
Size	Document Number: Ethernet board V3
Rev	05
Date	
Sheet	of