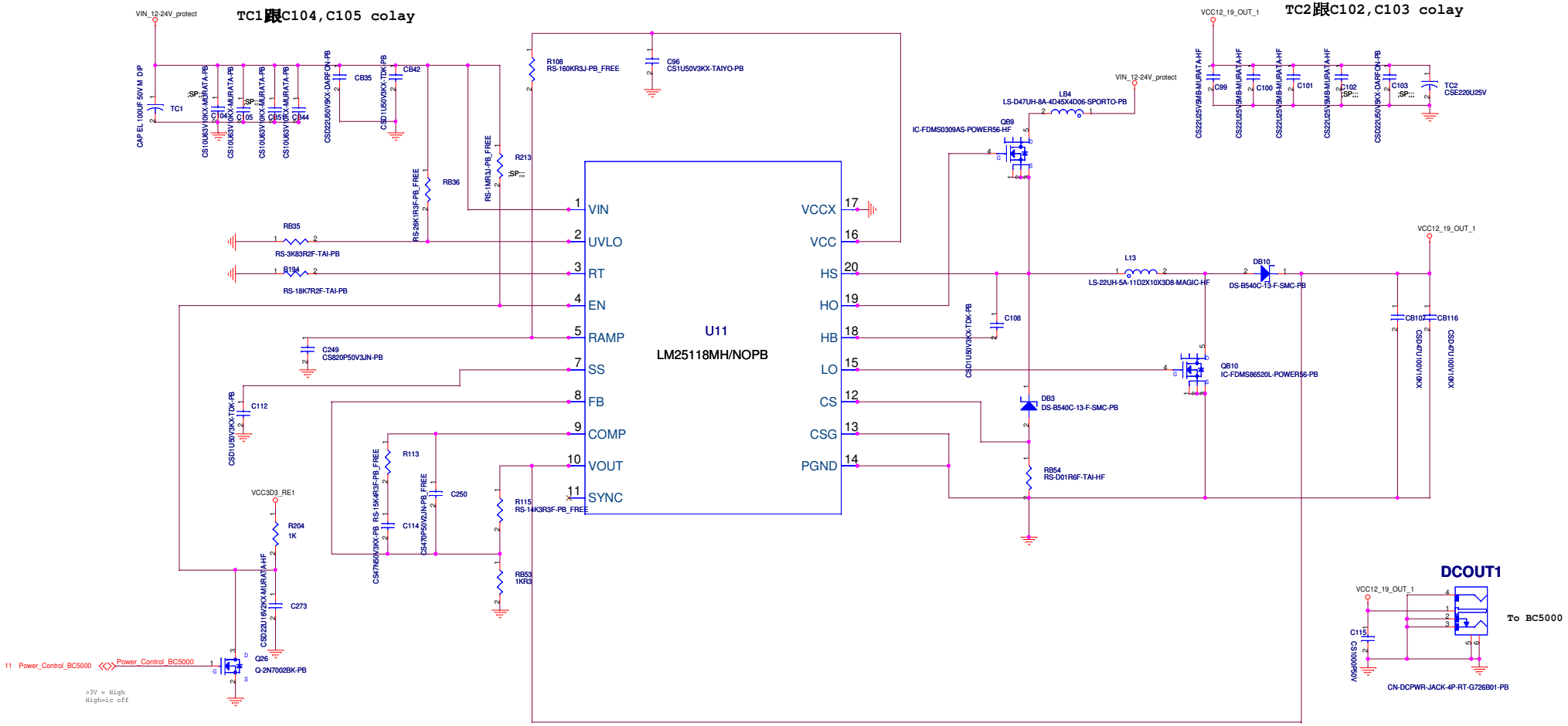
TC1跟C104,C105 colay
TC2跟C102,C103 colay
VIN_12-24V_protect
VCC12_19_OUT_1
VCC3D3_RE1
U11
LM25118MH/NOPB
VIN
UVLO
RT
EN
RAMP
SS
FB
COMP
VOUT
SYNC
VCCX
VCC
HS
HO
HB
LO
CS
CSG
PGND
R108
RS-160KR3J-PB_FREE
C96
CS1U50V3KX-TAIYO-PB
LB4
LS-D47UH-8A-4D45X4D06-SPORTO-PB
QB9
IC-FDMS0309AS-POWER56-HF
L13
LS-22UH-5A-11D2X10X3D8-MAGIC-HF
DB10
DS-B540C-13-F-SMC-PB
QB10
IC-FDMS86520L-POWER56-PB
DB3
DS-B540C-13-F-SMC-PB
RB54
RS-D01R6F-TAI-HF
RB35
RS-3K83R2F-TAI-PB
R194
RS-18K7R2F-TAI-PB
C249
CS820P50V3JN-PB
C112
CSD1U50V3KX-TDK-PB
R113
RS-15K4R3F-PB_FREE
C114
CS470P50V2JN-PB_FREE
C250
R115
RS-14K3R3F-PB_FREE
RB53
1KR3
R204
1K
C273
CSD22U16V2KX-MURATA-HF
Q26
Q-2N7002BK-PB
11 Power_Control_BC5000
Power_Control_BC5000
>3V = High
High=ic off
DCOUT1
To BC5000
CN-DCPWR-JACK-4P-RT-G726B01-PB
C115
CS1000P50V
C99
C100
C101
C102
C103
TC2
CSE220U25V
CB107
CB116
CSD47U100V10KX
Title
Power BC5000
Size
C
Document Number
PW-MCU-01
Rev
A01
Date:
Thursday, November 28, 2019
Sheet
8
of
16