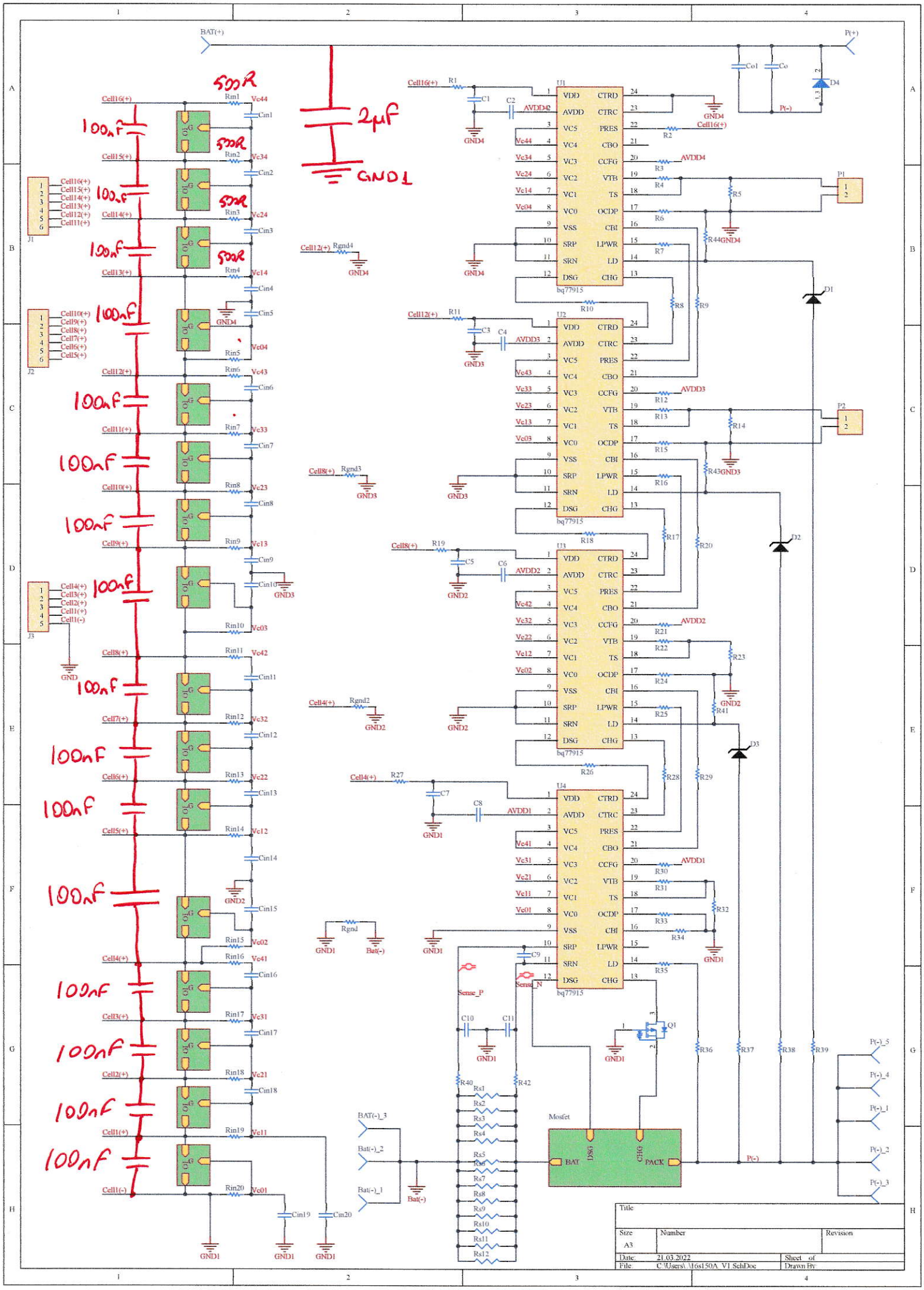
BAT(+)
P(+)
P(-)
2µF
GND1
500R
100nF
U1
U2
U3
U4
bq77915
J1
J2
J3
P1
P2
Mosfet
BAT
DSG
CHG
PACK
Sense_P
Sense_N
Title
Size
A3
Number
Revision
Date: 21.03.2022
File: C:\Users\...\6s150A_V1.SchDoc
Sheet of
Drawn By: