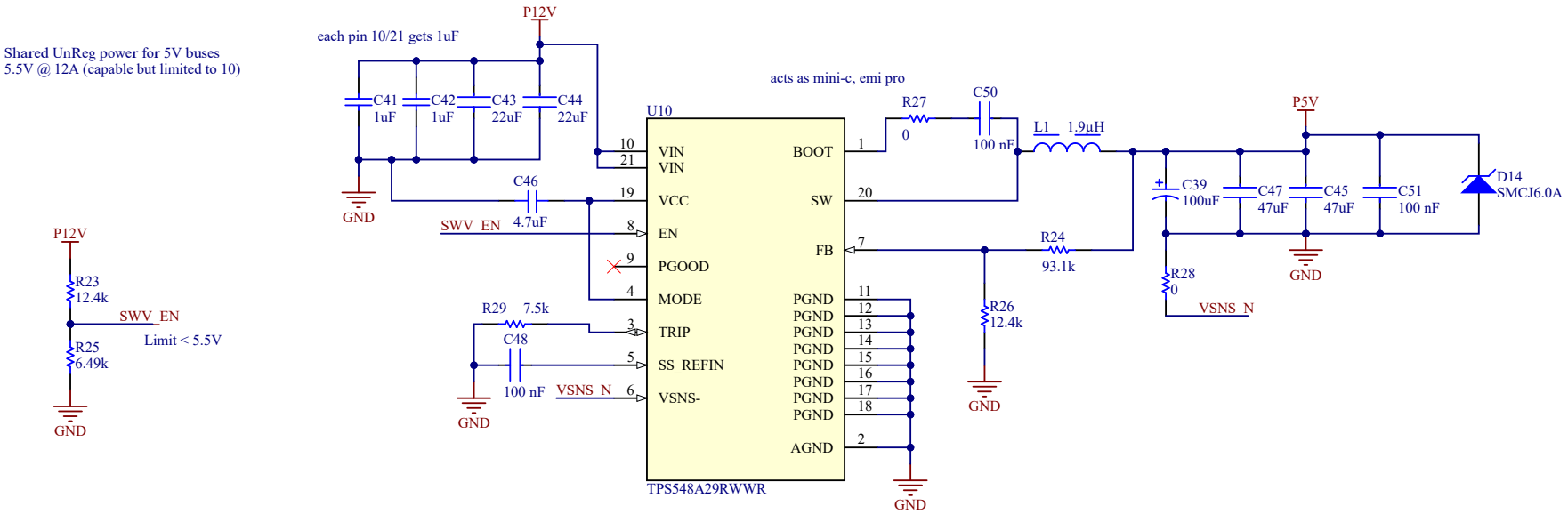
Shared UnReg power for 5V buses
5.5V @ 12A (capable but limited to 10)
P12V
each pin 10/21 gets 1uF
C41 1uF
C42 1uF
C43 22uF
C44 22uF
GND
C46 4.7uF
SWV_EN
U10
acts as mini-c, emi pro
VIN
VIN
VCC
EN
PGOOD
MODE
TRIP
SS_REFIN
VSNS-
BOOT
SW
FB
PGND
AGND
TPS548A29RWWR
R27 0
C50 100 nF
L1 1.9µH
P5V
C39 100uF
C47 47uF
C45 47uF
C51 100 nF
D14 SMCJ6.0A
R24 93.1k
R28 0
VSNS_N
R26 12.4k
R29 7.5k
C48 100 nF
VSNS_N
R23 12.4k
R25 6.49k
Limit < 5.5V