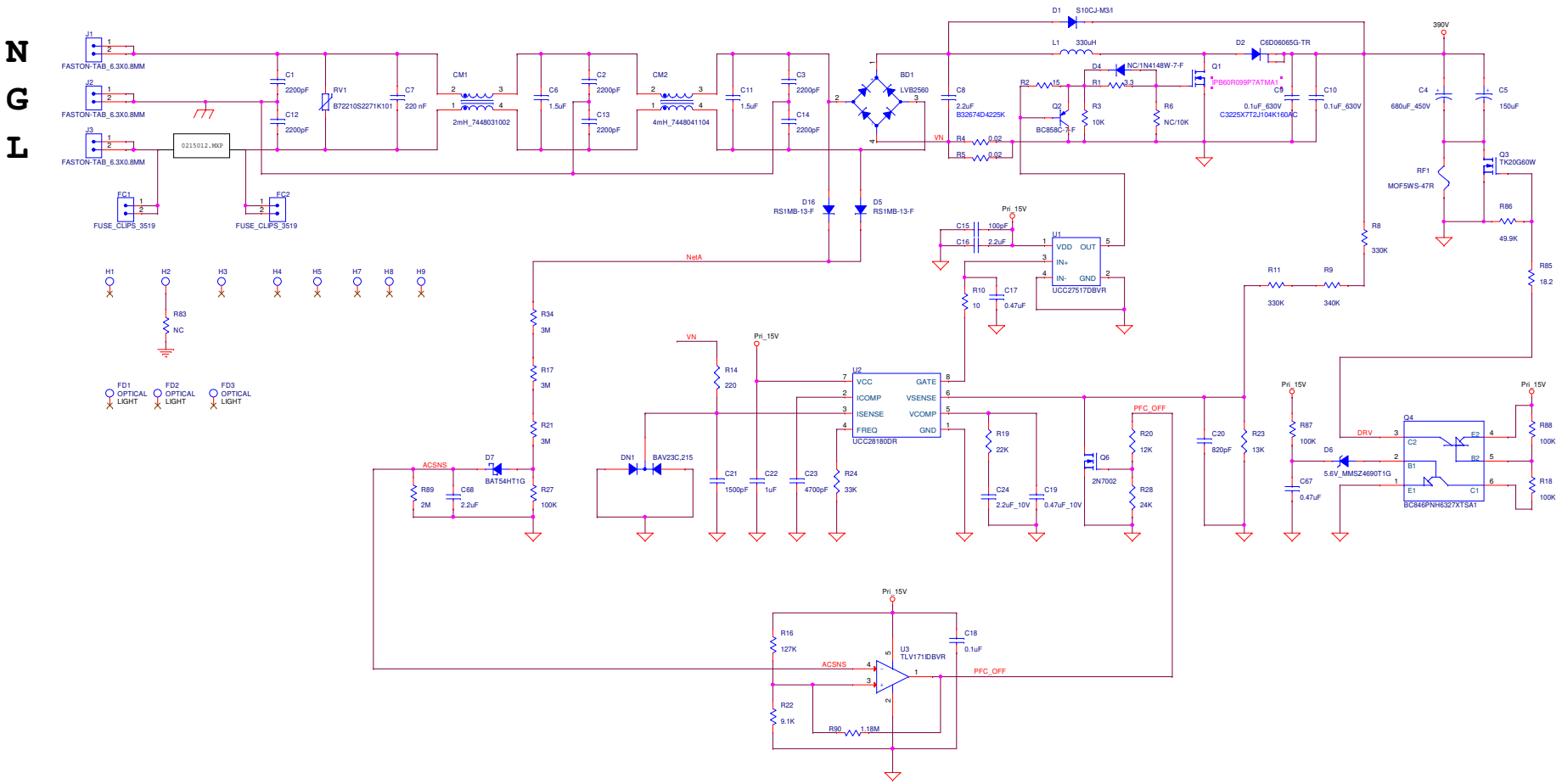

Title	P01. PRI_PFC	
Size C	Document Number ADP1000A 1000W AC/DC Board	Rev E20
Date: Monday, November 18, 2024	Sheet 1 of 2	

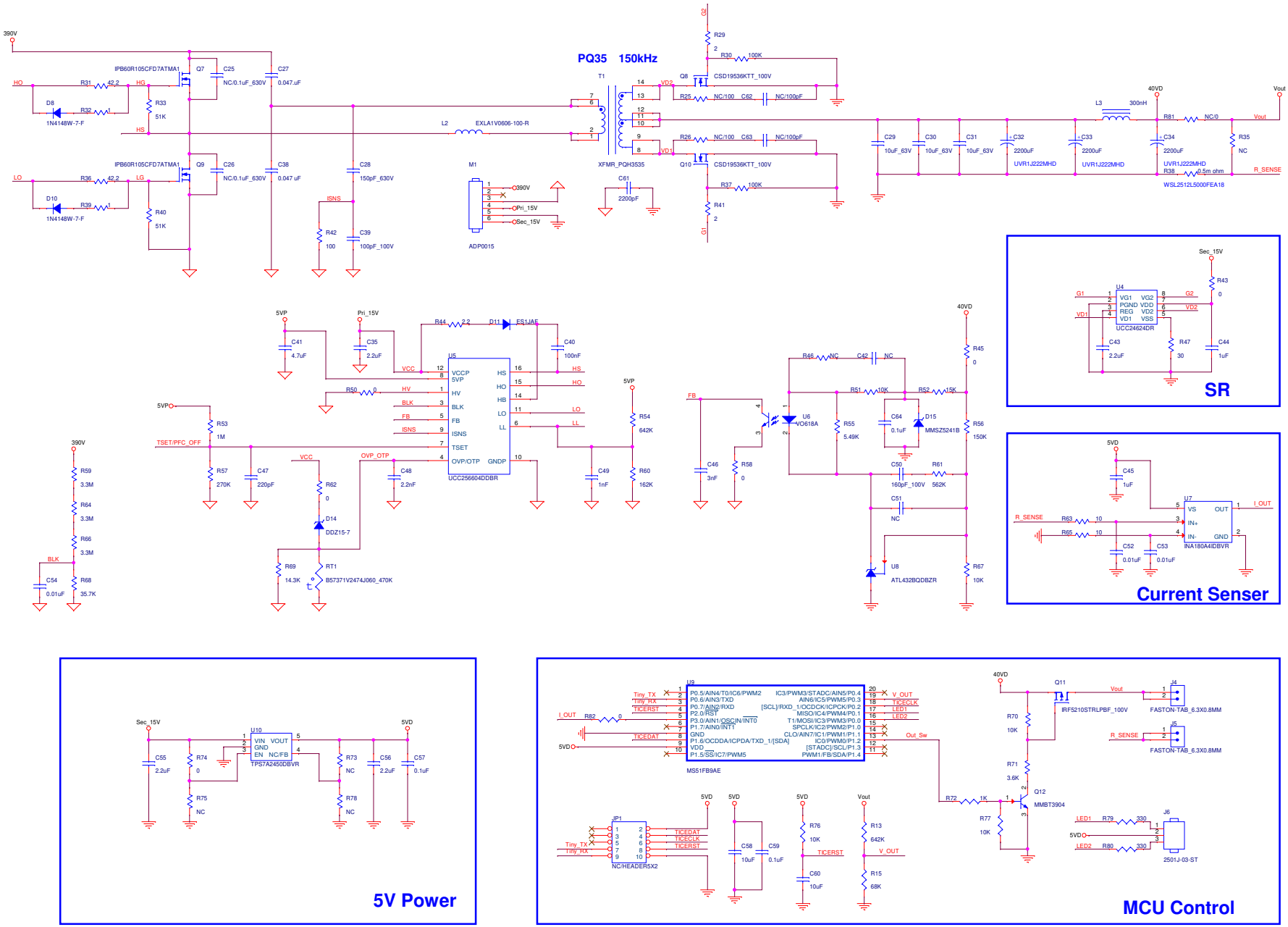

SINEWY TECHNOLOGY CO., LTD	
Title	P02. PRI_LLC/SEC DC OUT/MCU
Size C	Document Number ADP1000A 1000W AC/DC Board
Rev	E10
Date: Monday, November 18, 2024	Sheet 2 of 2