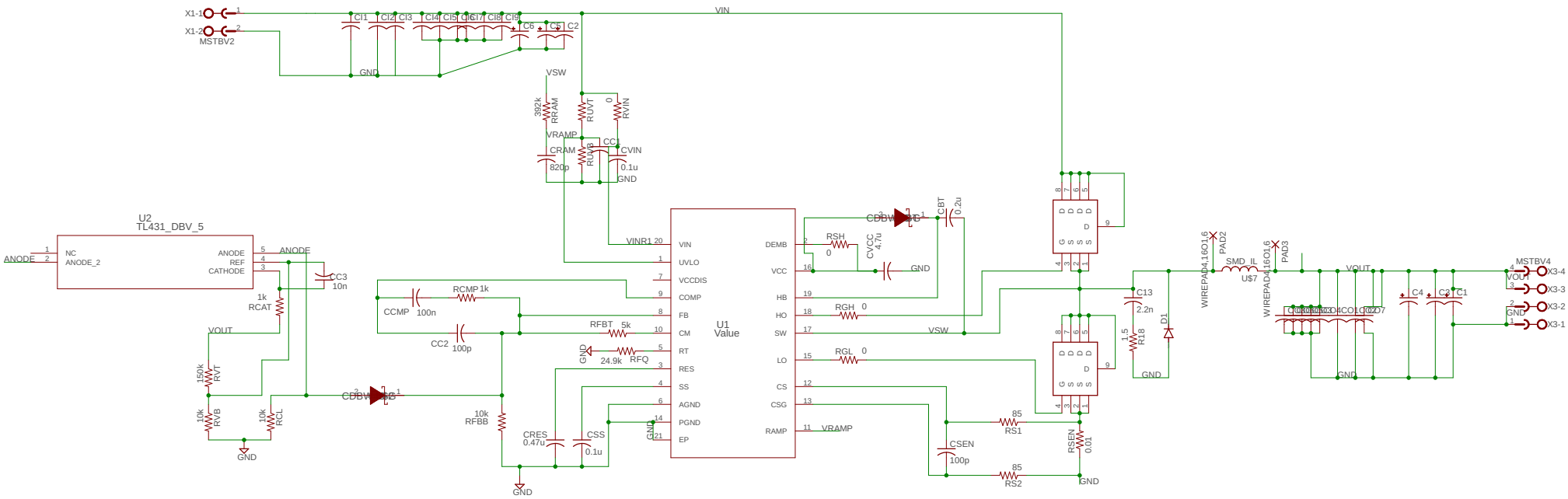
X1-1
X1-2
MSTBV2
VIN
GND
VSW
392k
RRAM
RUVT
0
RVIN
VRAMP
CRAM
820p
RUVB
CC4
CVIN
0.1u
U2
TL431_DBV_5
ANODE
NC
ANODE_2
REF
CATHODE
CC3
10n
1k
RCAT
VOUT
150k
RVT
10k
RVB
RCL
VINR1
U1
Value
VIN
UVLO
VCCDIS
COMP
FB
CM
RT
RES
SS
AGND
PGND
EP
DEMB
VCC
HB
HO
SW
LO
CS
CSG
RAMP
RCMP
1k
CCMP
100n
CC2
100p
RFBT
5k
RFQ
24.9k
RFBB
CRES
0.47u
CSS
RSH
CVCC
4.7u
CBT
0.2u
RGH
RGL
CSEN
100p
85
RS1
RS2
RSEN
0.01
C13
2.2n
1.5
R18
D1
WIREPAD
416O1.6
PAD2
SMD_IL
U$7
PAD3
C4
C2
C1
MSTBV4
X3-4
X3-3
X3-2
X3-1