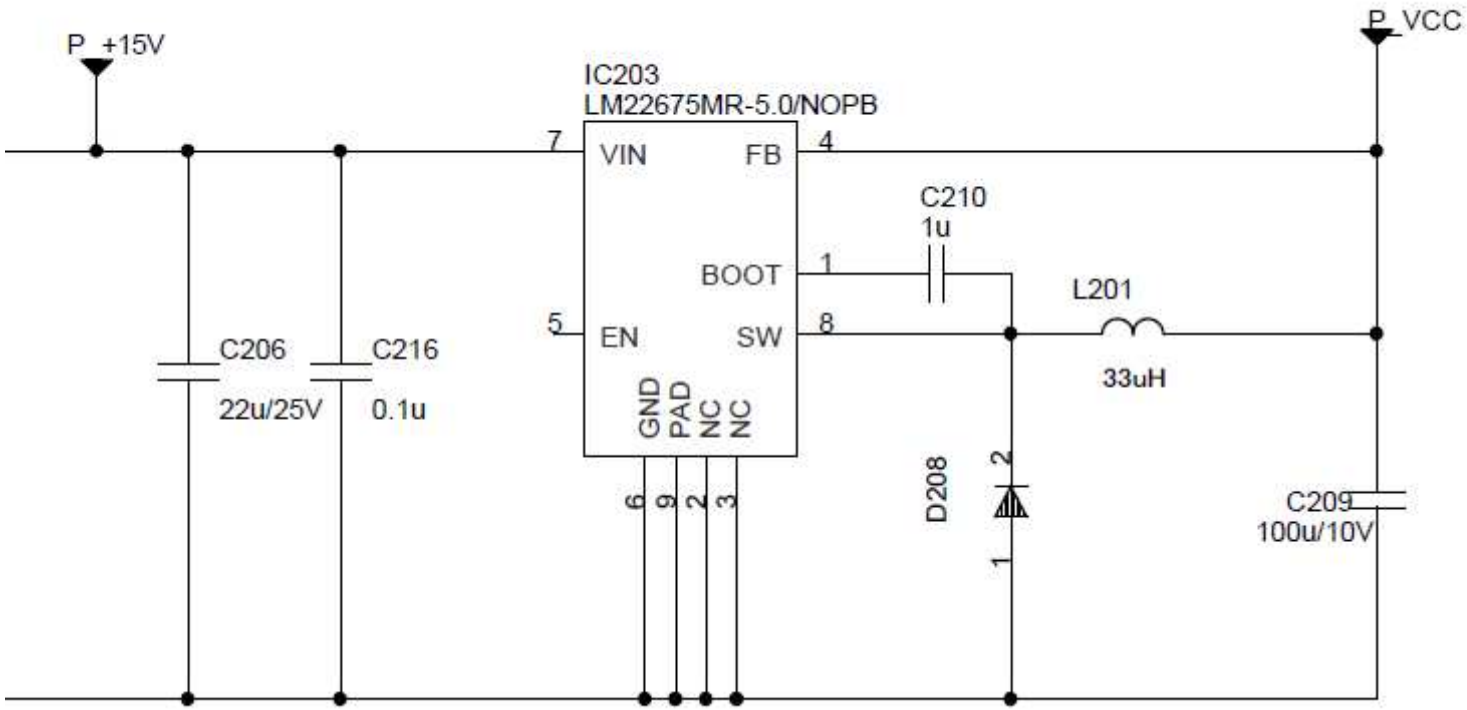
P_+15V
P_VCC
IC203
LM22675MR-5.0/NOPB
7
VIN
FB
4
C210
1u
BOOT
1
L201
5
EN
SW
8
33uH
C206
22u/25V
C216
0.1u
GND
PAD
NC
NC
6
9
2
3
D208
2
1
C209
100u/10V