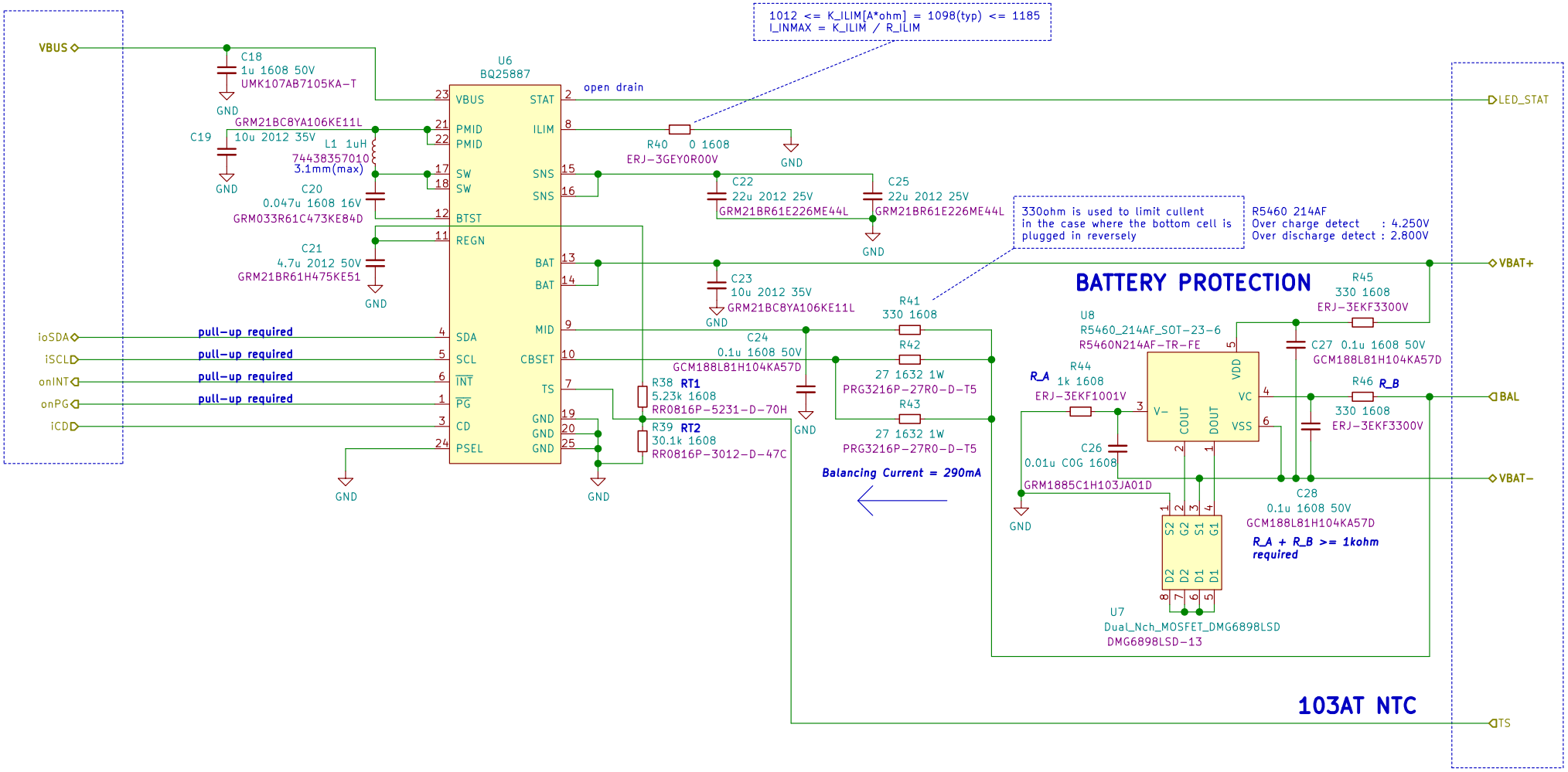

BATTERY MANAGEMENT

Sheet: /Battery Management/
File: Battery Management.sch

Title:

Size: A4	Date:	Rev:
KiCad E.D.A. kicad (5.1.4)-1		Id: 6/12