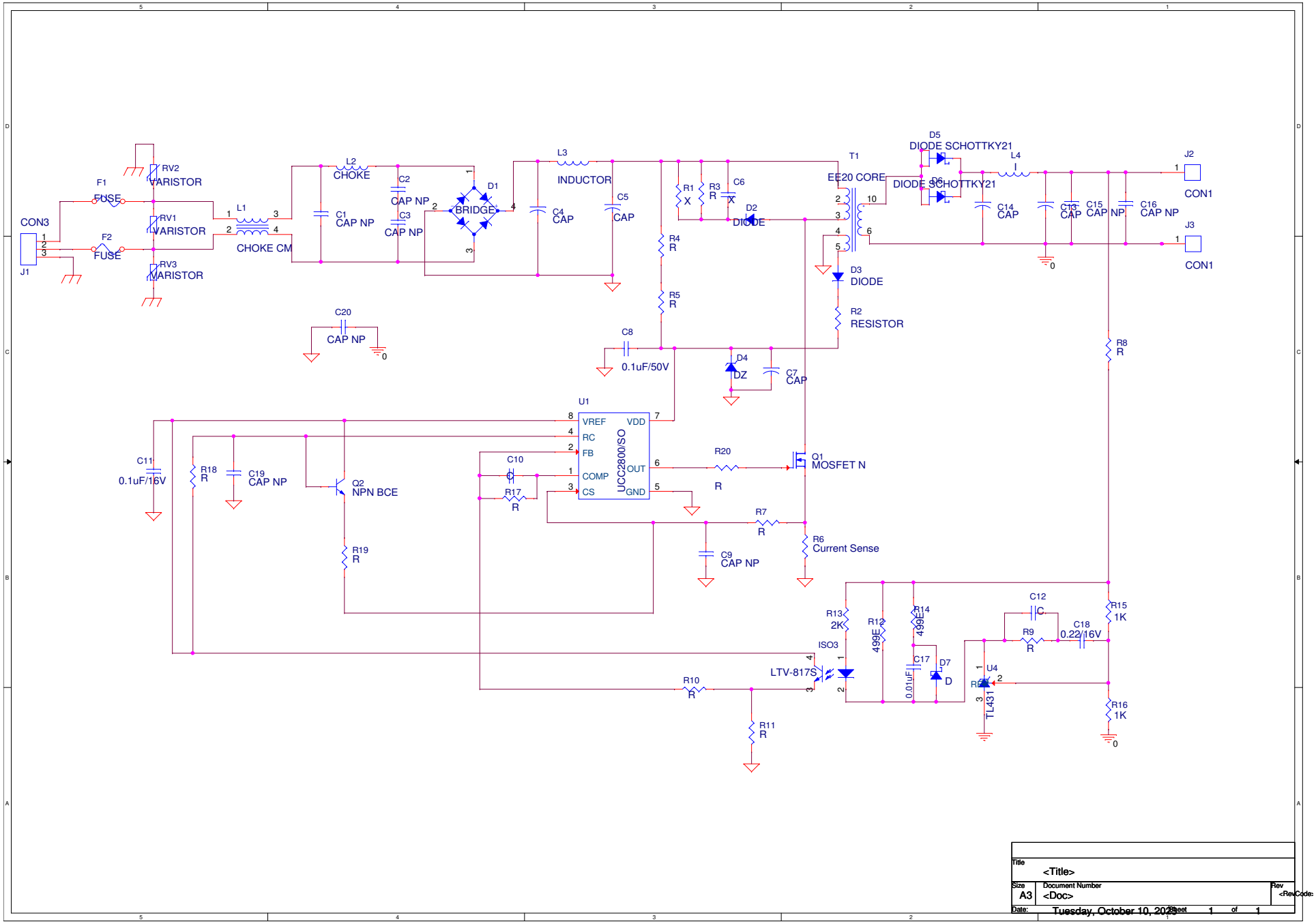

Title	<Title>
Size A3	Document Number <Doc>
Rev	<RevCode>
Date: Tuesday, October 10, 2023	Sheet 1 of 1