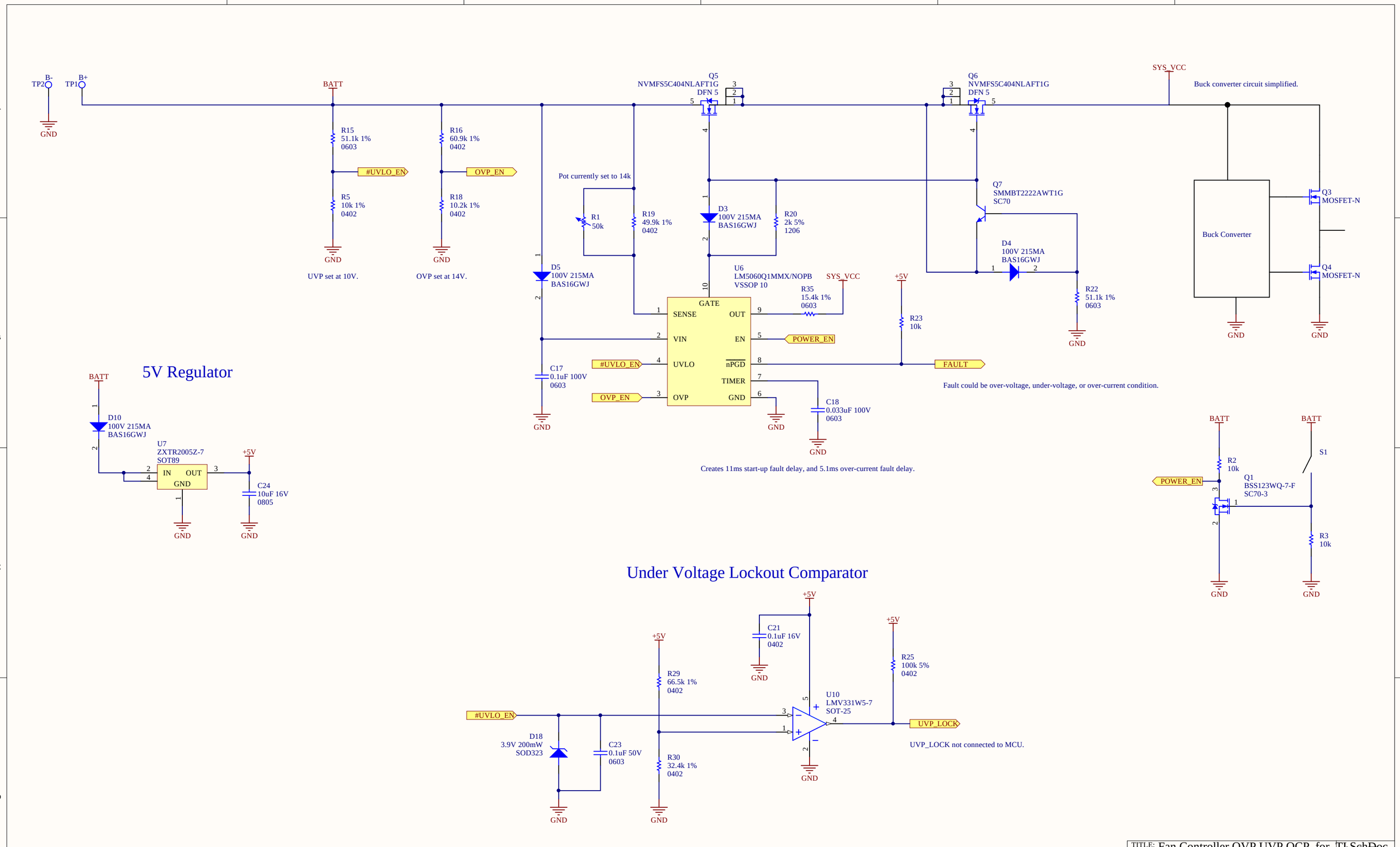

TITLE: Fan Controller OVP UVP OCP_for_TI.SchDoc		
DATE: 6/19/2019	TIME: 1:50:00 PM	NUMBER: 3
SHEET: 3 OF 4		SIZE: TABLOID
Protection_Circuit.PrjPcb		

LAE