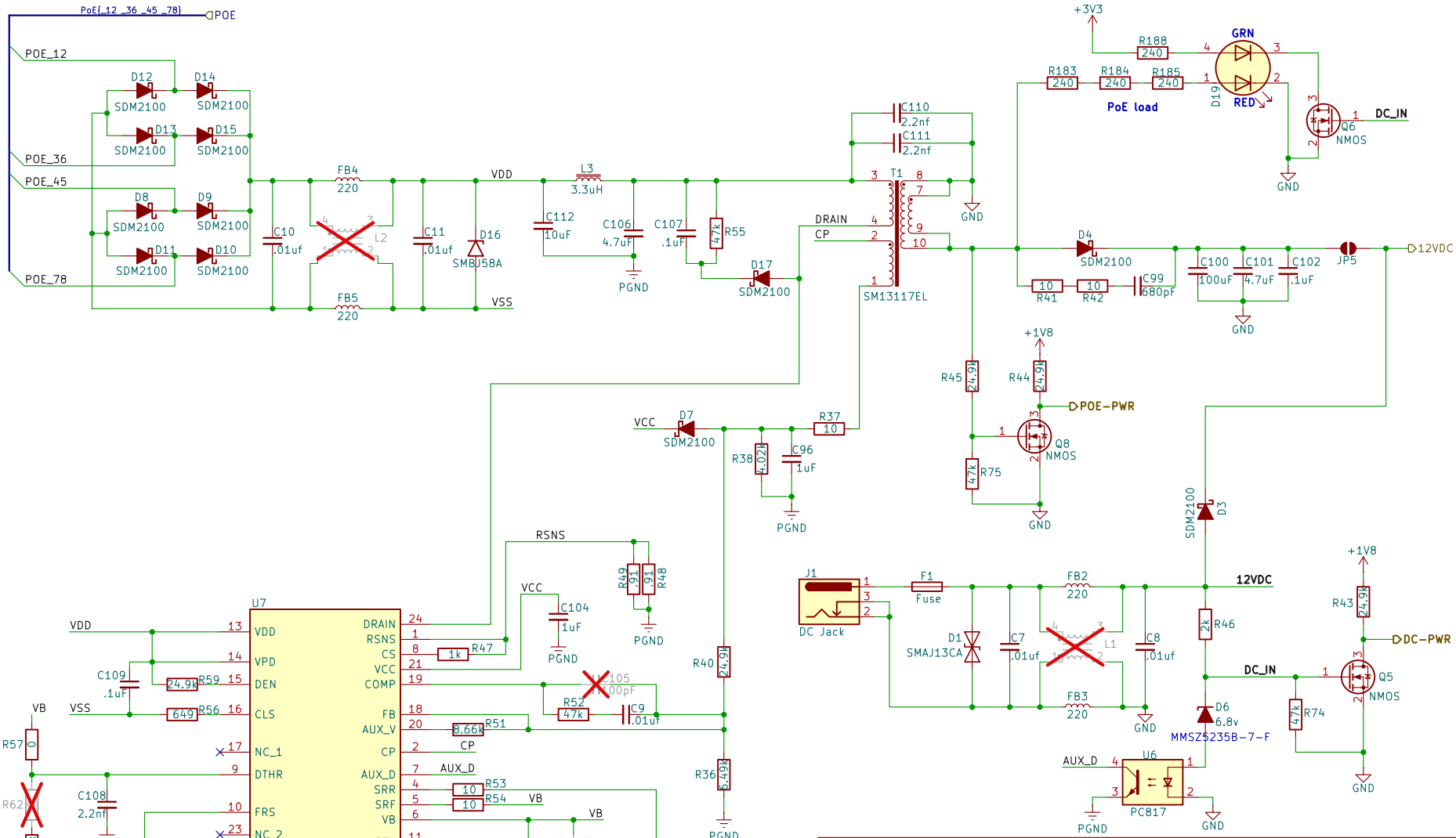

Sheet: /Power/PoE/
File: pwr_PoE_13W.kicad_sch

Title:

Size: A	Date: 2025-05-05	Rev: 1
KiCad E.D.A. 9.0.1		Id: 7/18