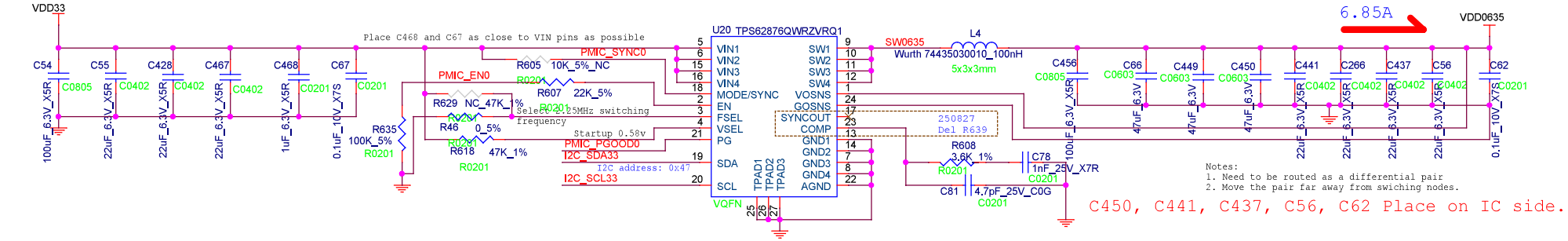
VDD33
Place C468 and C67 as close to VIN pins as possible
U20 TPS62876QWRZVRQ1
VIN1
VIN2
VIN3
VIN4
MODE/SYNC
EN
FSEL
VSEL
PG
SDA
SCL
SW1
SW2
SW3
SW4
VOSNS
GOSNS
SYNCOUT
COMP
GND1
GND2
GND3
GND4
AGND
TPAD1
TPAD2
TPAD3
VQFN
PMIC_SYNC0
PMIC_EN0
R605 10K_5%_NC
R607 22K_5%
R629 NC_47K_1%
Select 2.25MHz switching frequency
R46 0_5%
R618 47K_1%
Startup 0.58v
PMIC_PGOOD0
I2C_SDA33
I2C address: 0x47
I2C_SCL33
SW0635
L4
Wurth 74435030010_100nH
5x3x3mm
6.85A
VDD0635
250827 Del R639
R608 3.6K_1%
C78 1nF_25V_X7R
C81 4.7pF_25V_C0G
Notes:
1. Need to be routed as a differential pair
2. Move the pair far away from swiching nodes.
C450, C441, C437, C56, C62 Place on IC side.

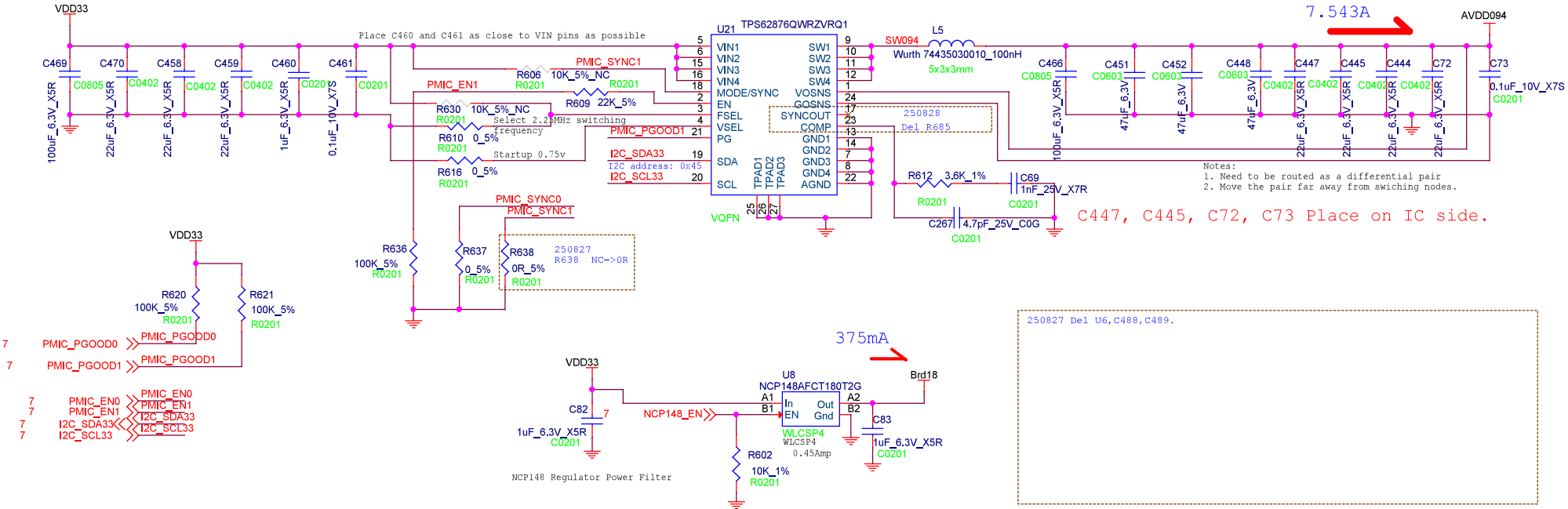
VDD33
Place C460 and C461 as close to VIN pins as possible
U21 TPS62876QWRZVRQ1
PMIC_SYNC1
PMIC_EN1
R606 10K_5%_NC
R609 22K_5%
R630 10K_5%_NC
Select 2.25MHz switching frequency
R610 0_5%
Startup 0.75v
R616 0_5%
PMIC_PGOOD1
I2C_SDA33
I2C address: 0x45
I2C_SCL33
SW094
L5
Wurth 74435030010_100nH
5x3x3mm
7.543A
AVDD094
250828 Del R685
R612 3.6K_1%
C69 1nF_25V_X7R
C267 4.7pF_25V_C0G
Notes:
1. Need to be routed as a differential pair
2. Move the pair far away from swiching nodes.
C447, C445, C72, C73 Place on IC side.
PMIC_SYNC0
PMIC_SYNCT
R636 100K_5%
R637 0_5%
R638 0R_5%
250827 R638 NC->0R
R620 100K_5%
R621 100K_5%
PMIC_PGOOD0
PMIC_PGOOD1
PMIC_EN0
PMIC_EN1
I2C_SDA33
I2C_SCL33
375mA
U8
NCP148AFCT180T2G
WLCSP4
0.45Amp
NCP148_EN
Brd18
C82 1uF_6.3V_X5R
C83 1uF_6.3V_X5R
R602 10K_1%
NCP148 Regulator Power Filter
250827 Del U6,C488,C489.