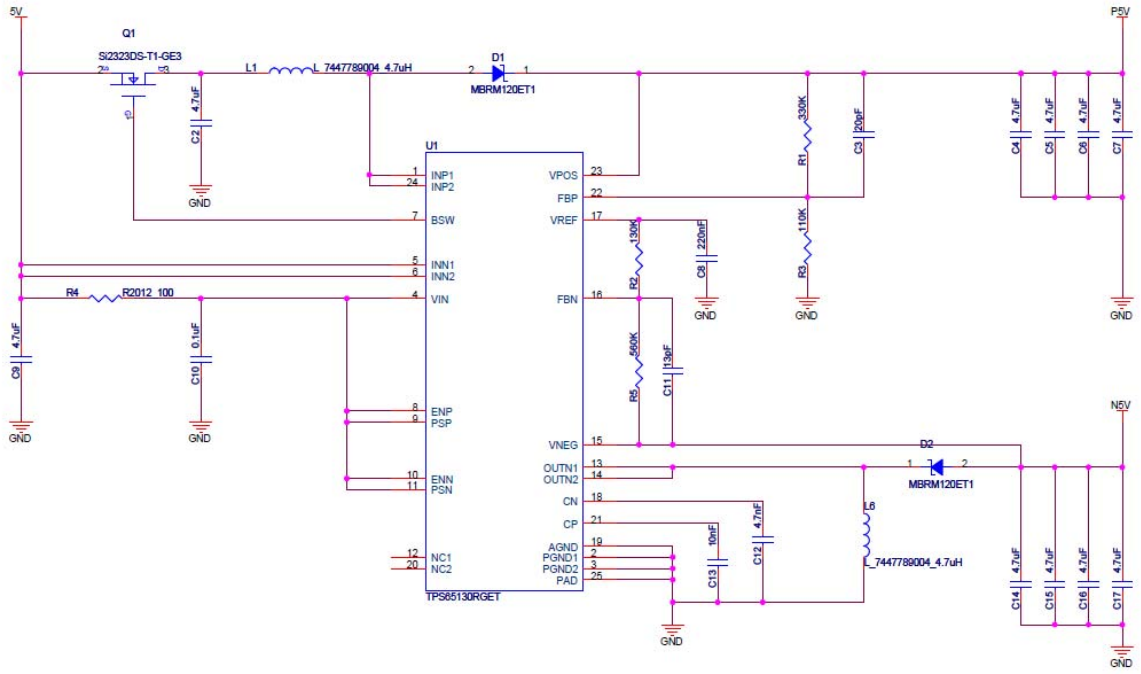
5V
Q1
Si2323DS-T1-GE3
L1
L_7447789004_4.7uH
D1
MBRM120ET1
C2
4.7uF
GND
U1
INP1
INP2
BSW
INN1
INN2
VIN
ENP
PSP
ENN
PSN
NC1
NC2
VPOS
FBP
VREF
FBN
VNEG
OUTN1
OUTN2
CN
CP
AGND
PGND1
PGND2
PAD
TPS65130RGET
R4
R2012_100
C9
4.7uF
C10
0.1uF
R1
330K
C3
20pF
R3
110K
R2
130K
C8
220nF
R5
560K
C11
13pF
C12
4.7nF
C13
10nF
L6
L_7447789004_4.7uH
D2
MBRM120ET1
P5V
N5V
C4
C5
C6
C7
C14
C15
C16
C17

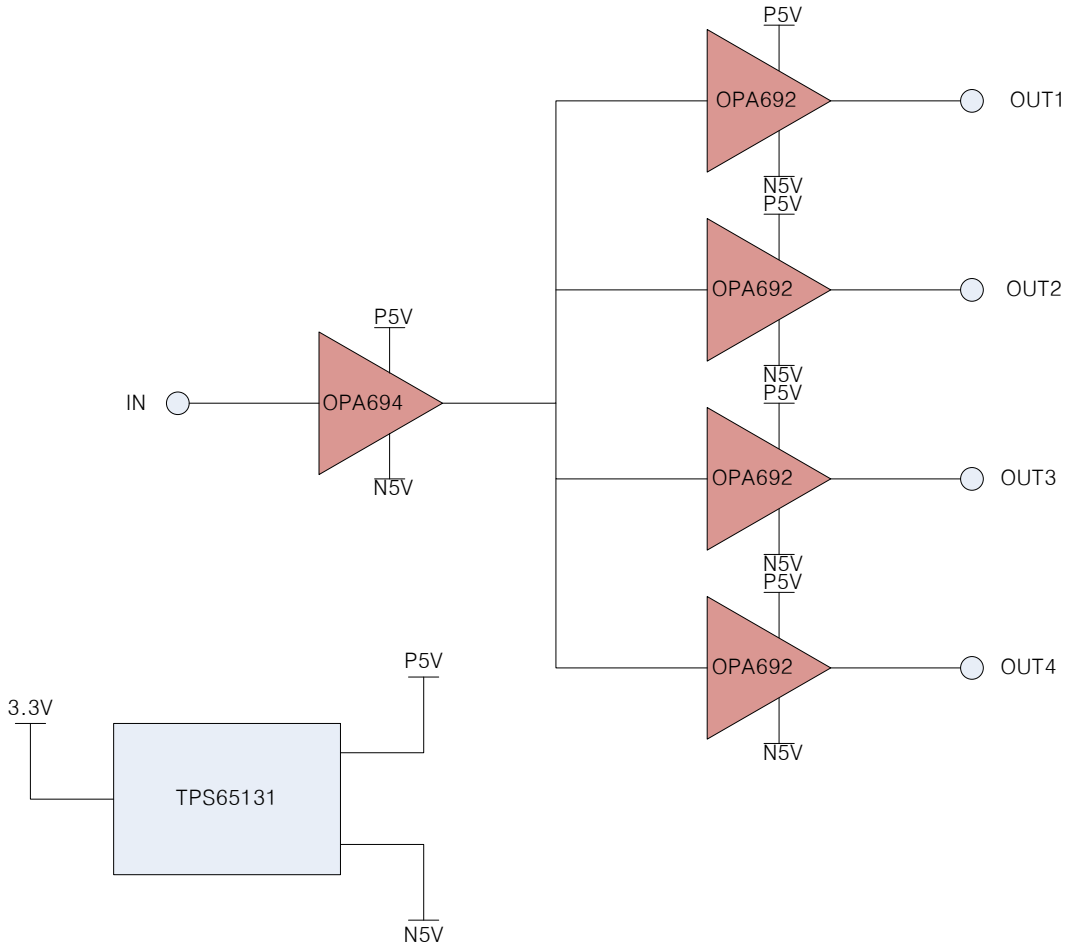
IN
OPA694
P5V
N5V
OPA692
OUT1
OUT2
OUT3
OUT4
3.3V
TPS65131