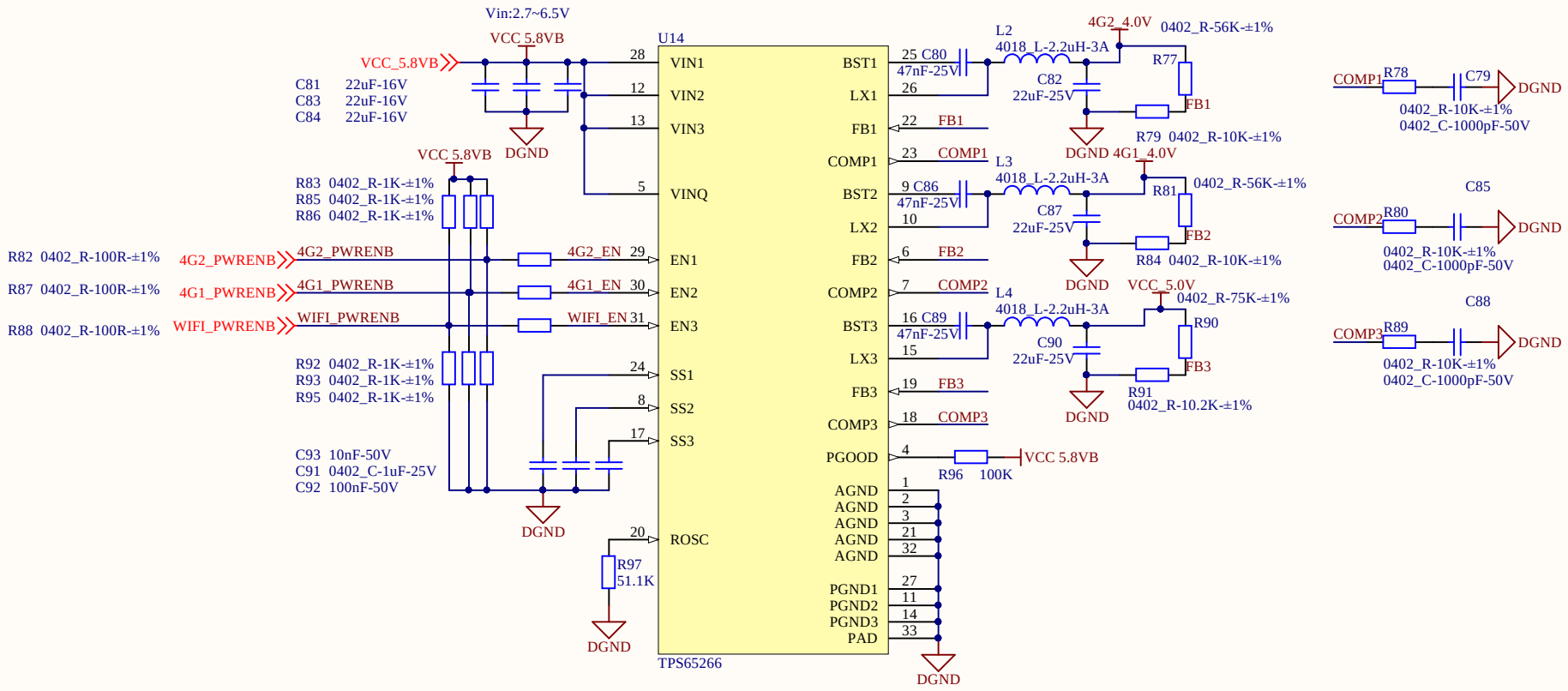

Title			
Size: A4	Number:*	Revision:	
Date: 2019-02-18	Time: 16:37:40	Sheet of	
File: C:\Users\fgh\Desktop\1\tps65266.SchDoc			