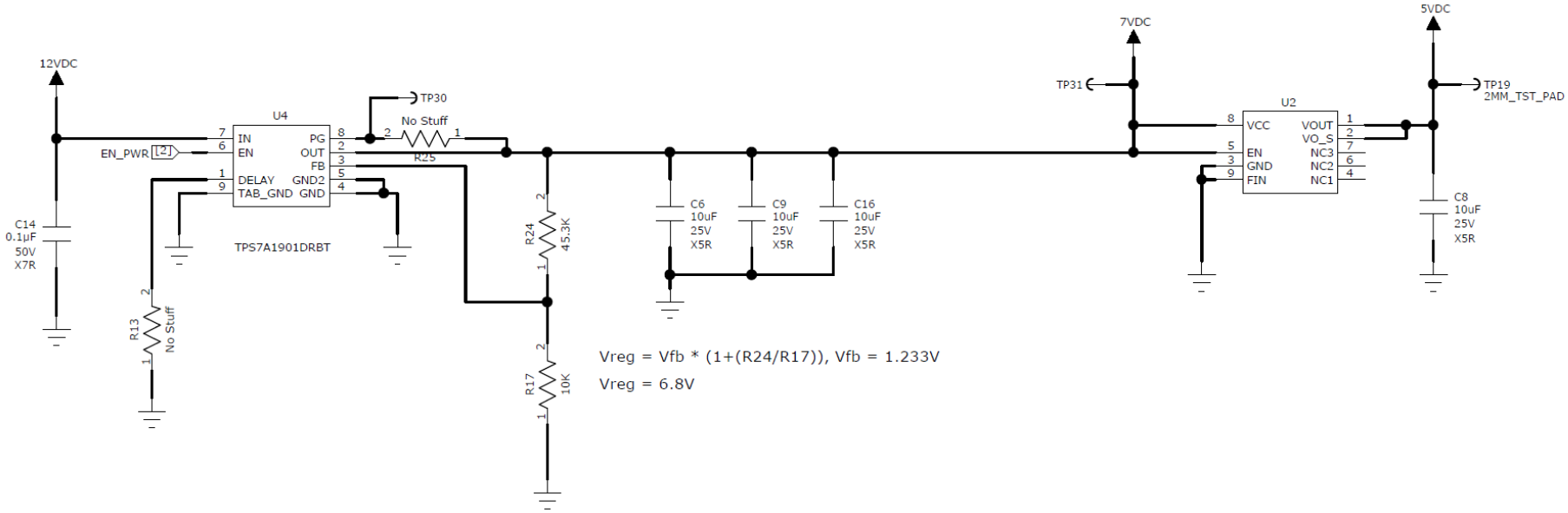
12VDC
U4
IN
EN
DELAY
TAB_GND
PG
OUT
FB
GND2
GND
EN_PWR
TP30
No Stuff
R25
TPS7A1901DRBT
C14
0.1µF
50V
X7R
R13
No Stuff
R24
45.3K
R17
10K
C6
10uF
25V
X5R
C9
10uF
25V
X5R
C16
10uF
25V
X5R
Vreg = Vfb * (1+(R24/R17)), Vfb = 1.233V
Vreg = 6.8V
7VDC
TP31
U2
VCC
EN
GND
FIN
VOUT
VO_S
NC3
NC2
NC1
5VDC
TP19
2MM_TST_PAD
C8
10uF
25V
X5R

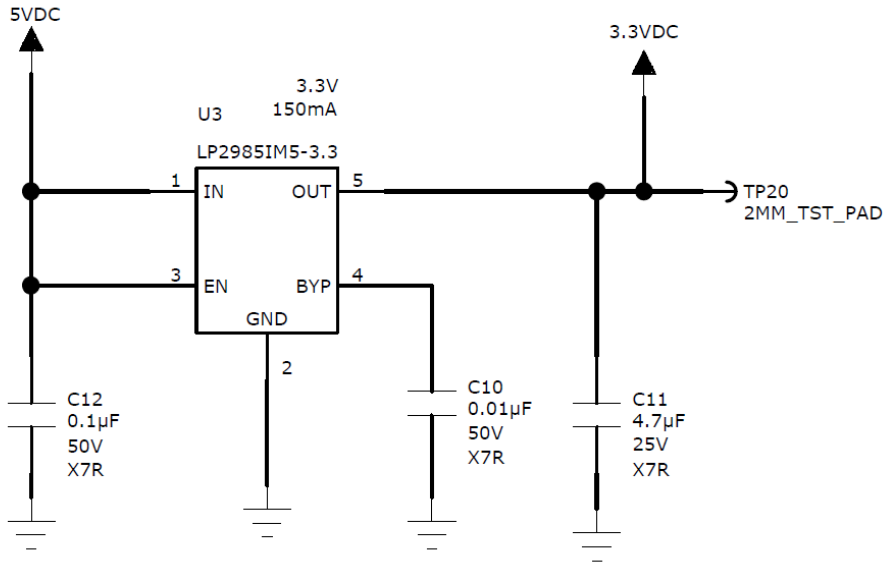
5VDC
U3
3.3V
150mA
LP2985IM5-3.3
IN
OUT
EN
BYP
GND
3.3VDC
TP20
2MM_TST_PAD
C12
0.1µF
50V
X7R
C10
0.01µF
50V
X7R
C11
4.7µF
25V
X7R