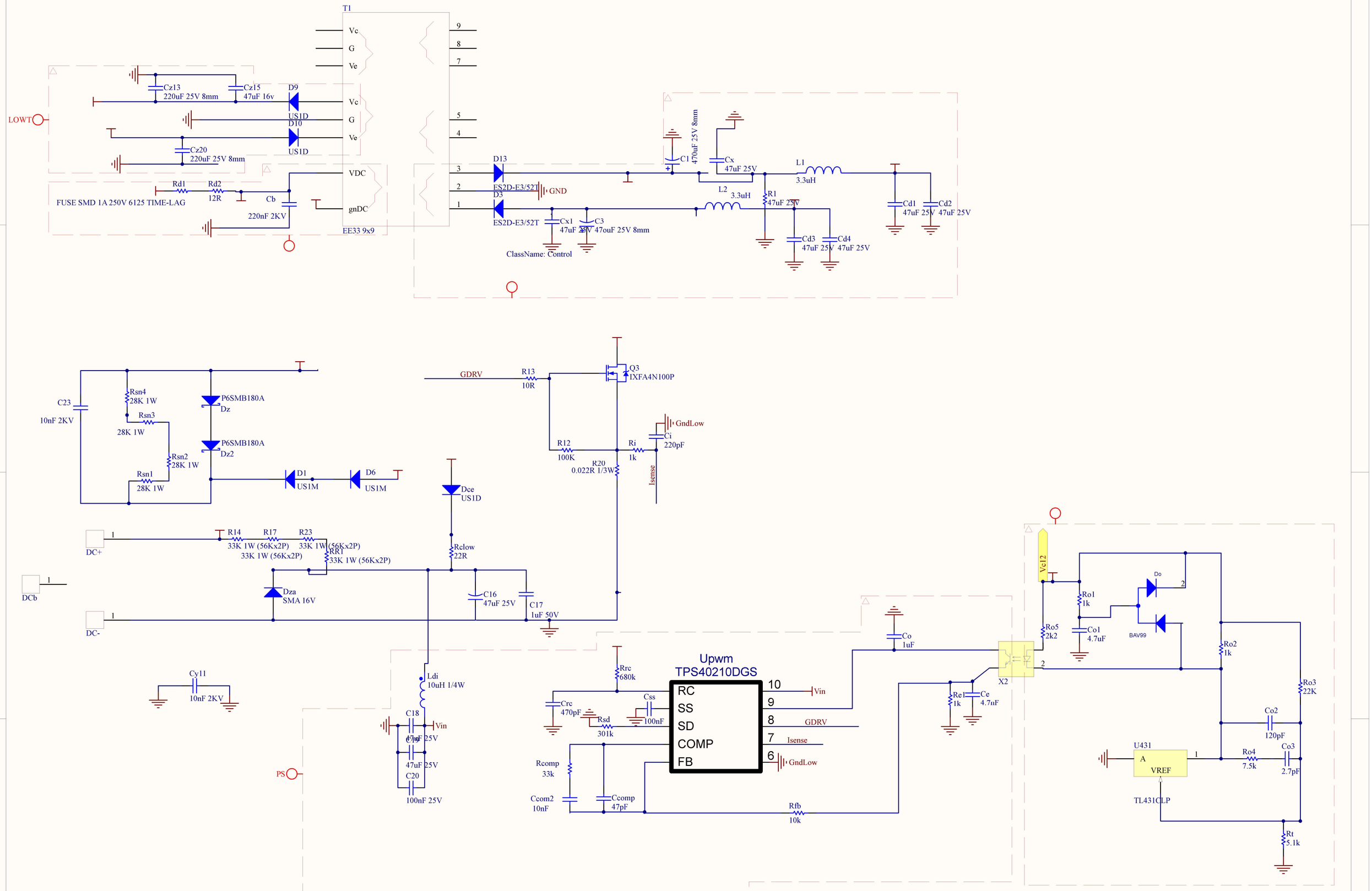

Title *			
Size: A3	Number:*	Revision:*	
Date: 12.03.2019	Time: 09:40:53	Sheet * of *	
File: C:\Users\Anil\Desktop\SMPSdd.SchDoc			

Altium