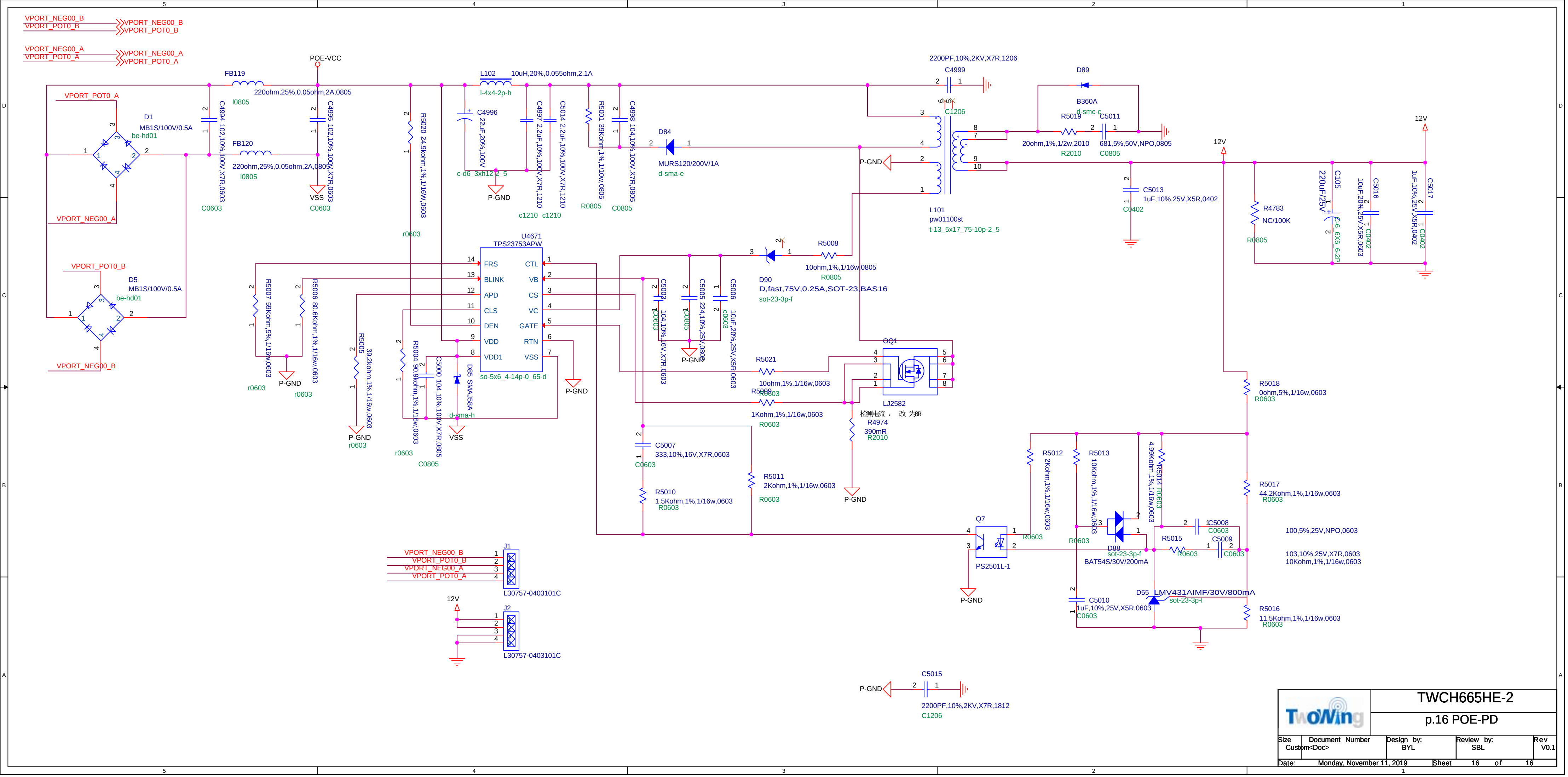
VPORT_NEG00_B
VPORT_POT0_B
VPORT_NEG00_A
VPORT_POT0_A
POE-VCC
FB119
220ohm,25%,0.05ohm,2A,0805
I0805
FB120
220ohm,25%,0.05ohm,2A,0805
D1
MB1S/100V/0.5A
be-hd01
D5
MB1S/100V/0.5A
C4994 102,10%,100V,X7R,0603
C4995 102,10%,100V,X7R,0603
C0603
VSS
L102
10uH,20%,0.055ohm,2.1A
I-4x4-2p-h
C4996
22uF,20%,100V
c-d6_3xh12-2_5
C4997 2.2uF,10%,100V,X7R,1210
C5014 2.2uF,10%,100V,X7R,1210
c1210
R5001 39Kohm,1%,1/10w,0805
R0805
C4998 104,10%,100V,X7R,0805
C0805
R5020 24.9kohm,1%,1/16W,0603
r0603
P-GND
D84
MURS120/200V/1A
d-sma-e
2200PF,10%,2KV,X7R,1206
C4999
C1206
D89
B360A
d-smc-c
R5019
C5011
20ohm,1%,1/2w,2010
R2010
681,5%,50V,NPO,0805
L101
pw01100st
t-13_5x17_75-10p-2_5
12V
C5013
1uF,10%,25V,X5R,0402
C0402
R4783
NC/100K
C105
220uF/25V
C5016
10uF,20%,25V,X5R,0603
C5017
1uF,10%,25V,X5R,0402
U4671
TPS23753APW
FRS
BLINK
APD
CLS
DEN
VDD
VDD1
CTL
VB
CS
VC
GATE
RTN
VSS
so-5x6_4-14p-0_65-d
R5007 59Kohm,5%,1/16w,0603
R5006 80.6Kohm,1%,1/16w,0603
R5005 39.2kohm,1%,1/16w,0603
R5004 90.9kohm,1%,1/16w,0603
C5000 104,10%,100V,X7R,0805
D85 SMAJ58A
d-sma-h
D90
D,fast,75V,0.25A,SOT-23,BAS16
sot-23-3p-f
R5008
10ohm,1%,1/16w,0805
C5003 104,10%,16V,X7R,0603
C5005 224,10%,25V,0805
C5006 10uF,20%,25V,X5R,0603
OQ1
R5021
10ohm,1%,1/16w,0603
R5009
1Kohm,1%,1/16w,0603
R0603
LJ2582
R4974
390mR
检测电流，改为6R
C5007
333,10%,16V,X7R,0603
R5010
1.5Kohm,1%,1/16w,0603
R5011
2Kohm,1%,1/16w,0603
R5018
0ohm,5%,1/16w,0603
R5012
2Kohm,1%,1/16w,0603
R5013
10Kohm,1%,1/16w,0603
R5014
4.99Kohm,1%,1/16w,0603
R5017
44.2Kohm,1%,1/16w,0603
Q7
PS2501L-1
D88
BAT54S/30V/200mA
R5015
C5008
C5009
100,5%,25V,NPO,0603
103,10%,25V,X7R,0603
10Kohm,1%,1/16w,0603
C5010
1uF,10%,25V,X5R,0603
D55_LMV431AIMF/30V/800mA
sot-23-3p-l
R5016
11.5Kohm,1%,1/16w,0603
J1
L30757-0403101C
J2
L30757-0403101C
C5015
2200PF,10%,2KV,X7R,1812
TWCH665HE-2
p.16 POE-PD
Size
Custom
Document Number
<Doc>
Design by:
BYL
Review by:
SBL
Rev
V0.1
Date: Monday, November 11, 2019
Sheet 16 of 16