+1.0V_PVCCSRAM
Imax=8A

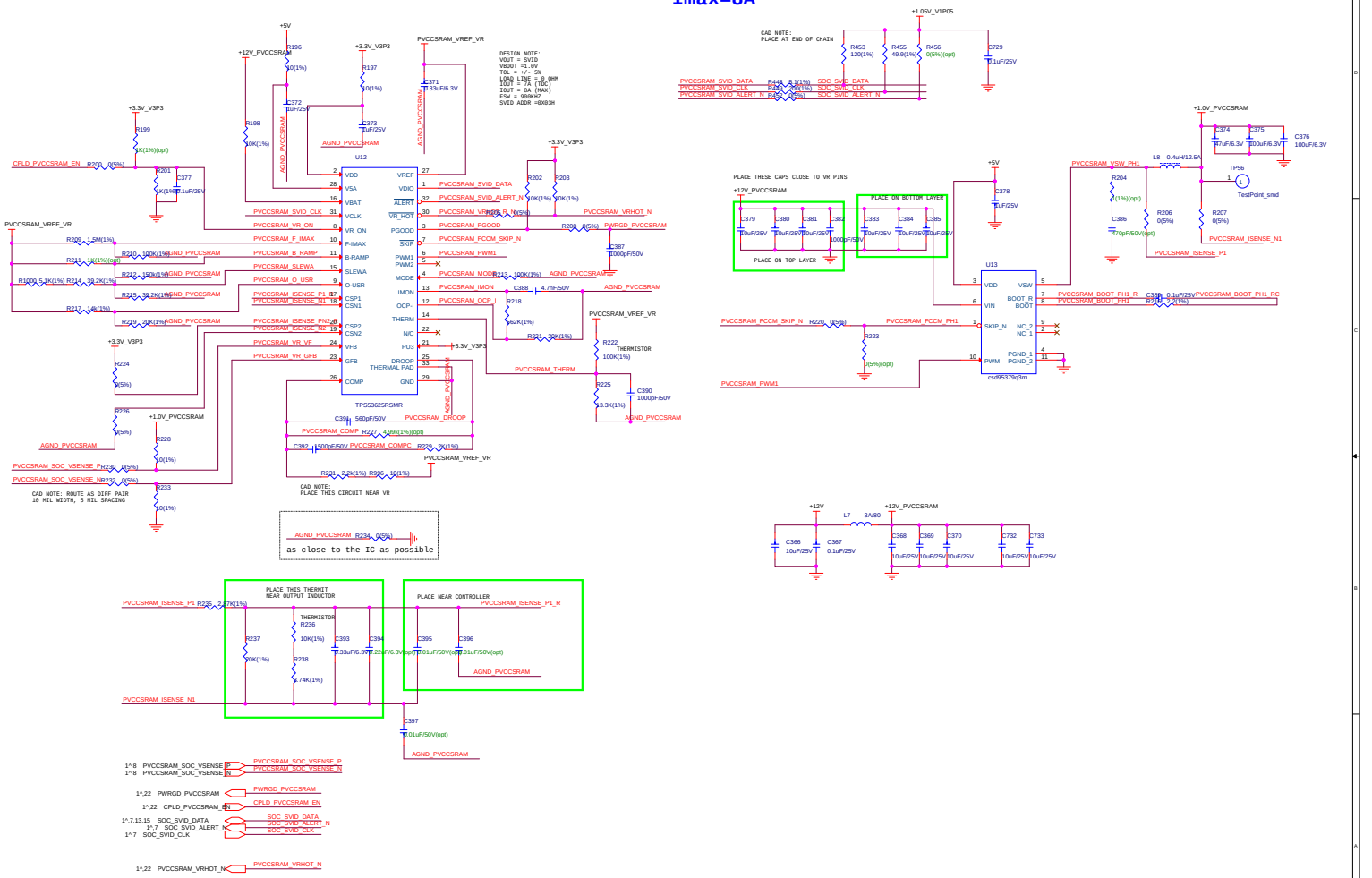

Title	<Title>
Size C	Document Number <Doc>
Rev	<RevCode>
Date: Monday, November 20, 2017	Sheet 14 of 23