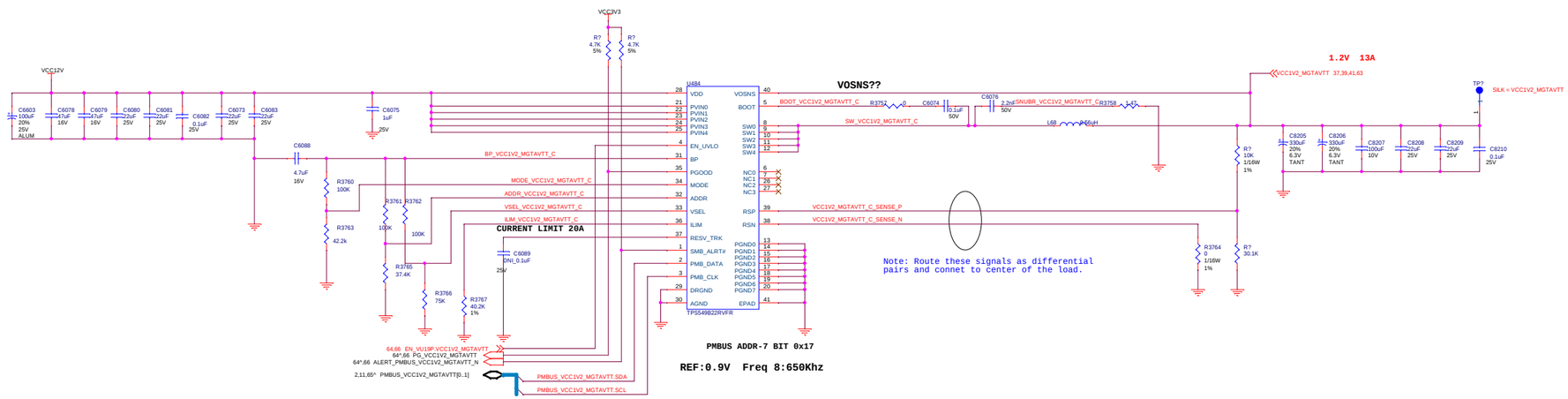

Title	<Title>	
Size D	Document Number <Doc>	Rev <RevCode>
Date: Wednesday, July 22, 2020	Sheet 1 of 1	