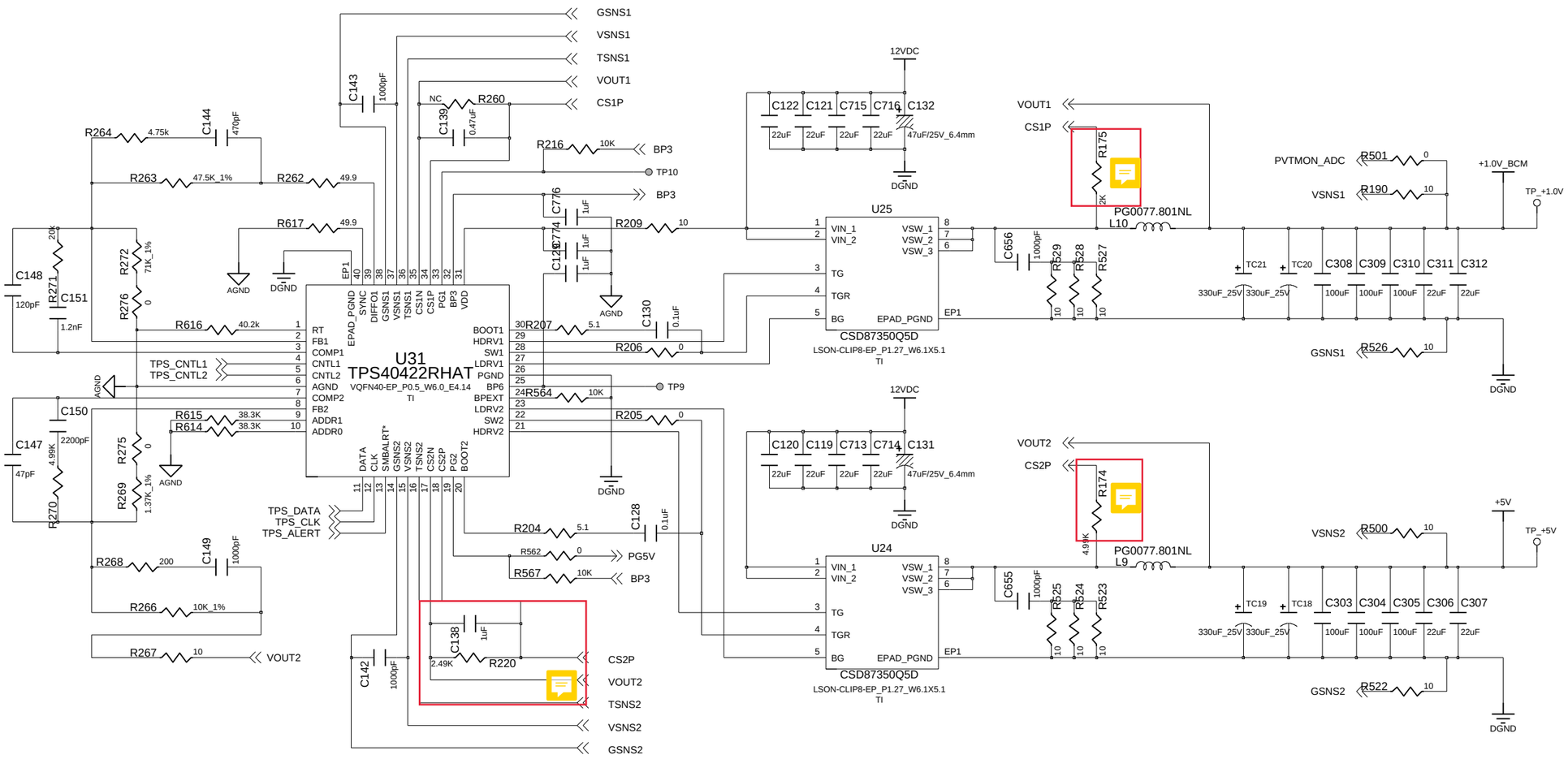

CODE	07114A
MODEL	XCU
PAGE	18/20