THIS DOCUMENT CONTAINS INFORMATION PROPRIETARY TO ZTE CORPORATION (ZTE). USE OR DISCLOSURE WITHOUT THE WRITTEN PERMISSION OF AN OFFICER OF ZTE IS EXPRESSLY FORBIDDEN.

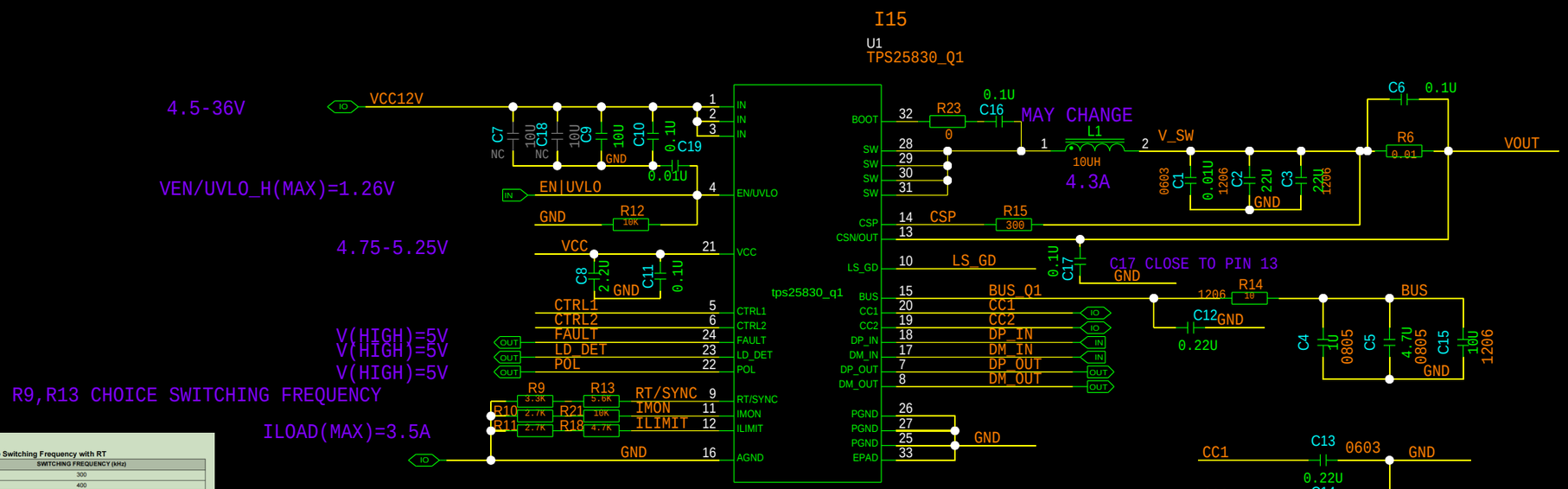

表 10-1 lists typical RT resistors value.

表 10-1. Setting the Switching Frequency with RT

RT (kΩ)	SWITCHING FREQUENCY (kHz)
68.1	300
49.9	400
39.2	500
19.1	1000
12.4	1500
9.31	2000
8.87	2100
8.45	2200

表 10-10. Truth Table

DEVICE	CTR L1	CTR L2	CURRENT LIMIT SETTING	USB MODES	BUCK REGULATOR	LS_GD	LD_DET (OUTPUT)	POL (OUTPUT)	FAULT (OUTPUT)	NTC (ANALOG INPUT)
TPS25830-Q1	0	0	RESERVED, DO NOT USE							
	0	1	RESERVED, DO NOT USE							
	1	0	See *Current Limit Setting using R_{ILIMIT}*	Type-C (1.5 A) + SDP Mode	functional, see 表 10-7				Functional, see 表 10-4	n/a
	1	1		Type-C (3 A) + CDP Mode						n/a
TPS25831-Q1	0	0	RESERVED, DO NOT USE							
	0	1	*Current Limit Setting using R_{ILIMIT}*	Type-C (3 A) + DCP Auto Mode	Functional, see 表 10-7				Functional, see 表 10-4	functional
	1	0		Type-C (1.5 A) + SDP Mode						functional
	1	1		Type-C (3 A) + CDP Mode						functional

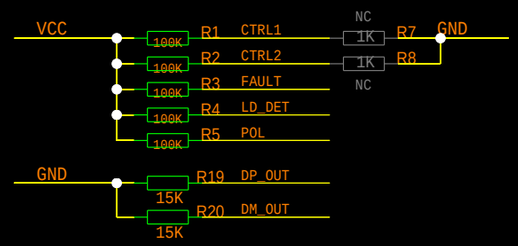

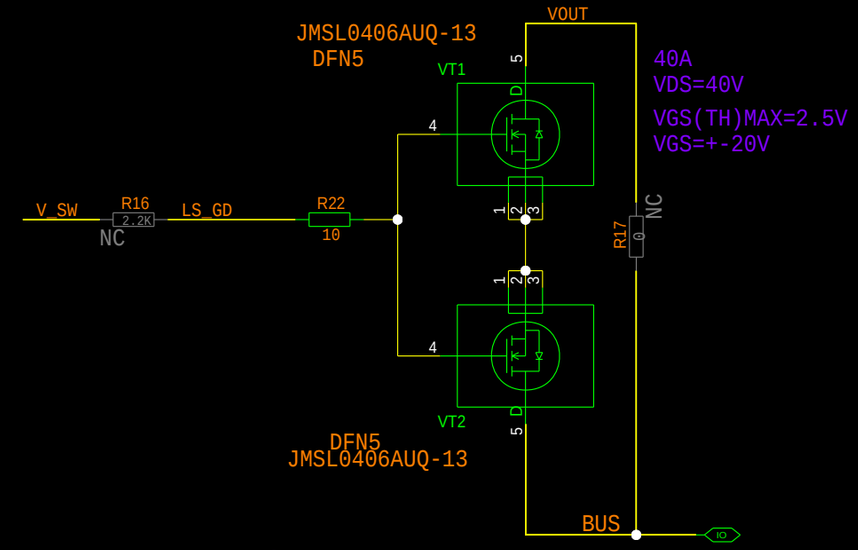

PLAN A @BUCK AVERAGE CURRENT LIMIT:
MOSFET NC, 0OHM AND 2.2K USED

PLAN B @CURRENT LIMIT WITH EXTERNAL MOSFET:
MOSFET USED, 0OHM AND 2.2K NC

PLAN B IS USED IN THIS DESIGN.

ZTE CORPORATION	MODEL:	SHEET OF
DRAWN	TITLE:	VERSION:
CHECKED	DRAWING NO.:	

SIZE:A4