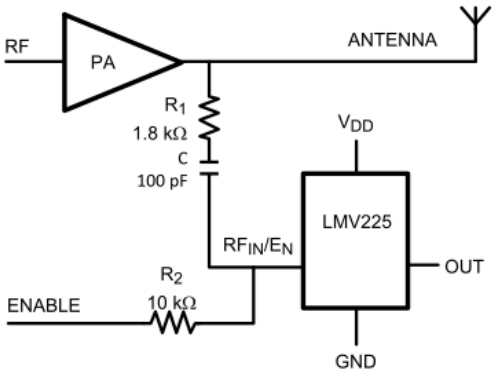
RF
PA
ANTENNA
R1
1.8 kΩ
C
100 pF
VDD
LMV225
RFIN/EN
OUT
R2
10 kΩ
ENABLE
GND

NG

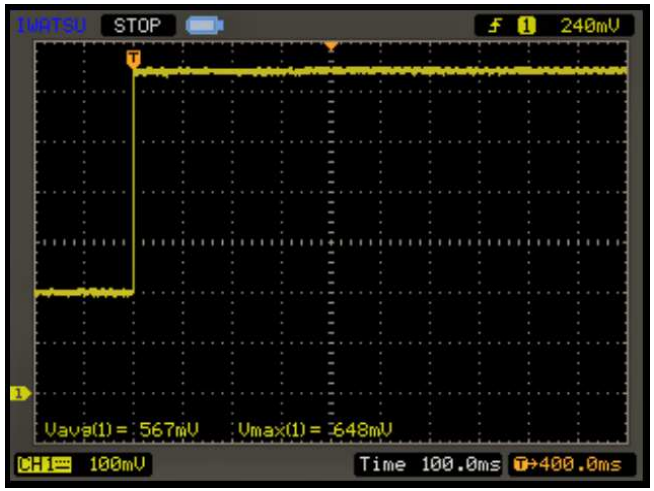
IWATSU
STOP
240mV
Vave(1) = 567mV
Vmax(1) = 648mV
100mV
Time 100.0ms
400.0ms

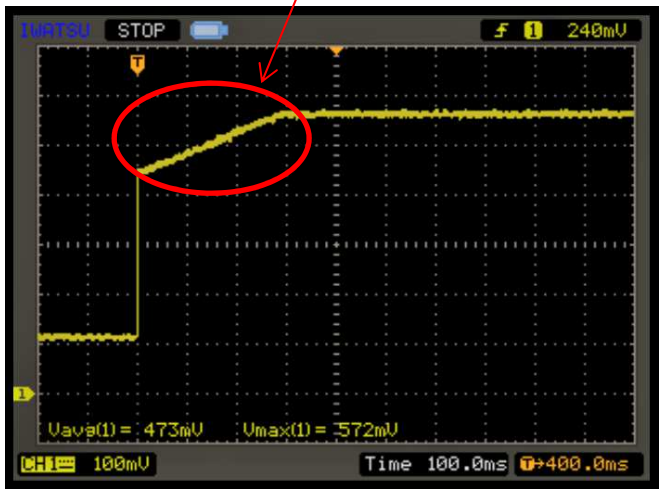
IWATSU
STOP
240mV
Vave(1) = 473mV
Vmax(1) = 572mV
100mV
Time 100.0ms
400.0ms