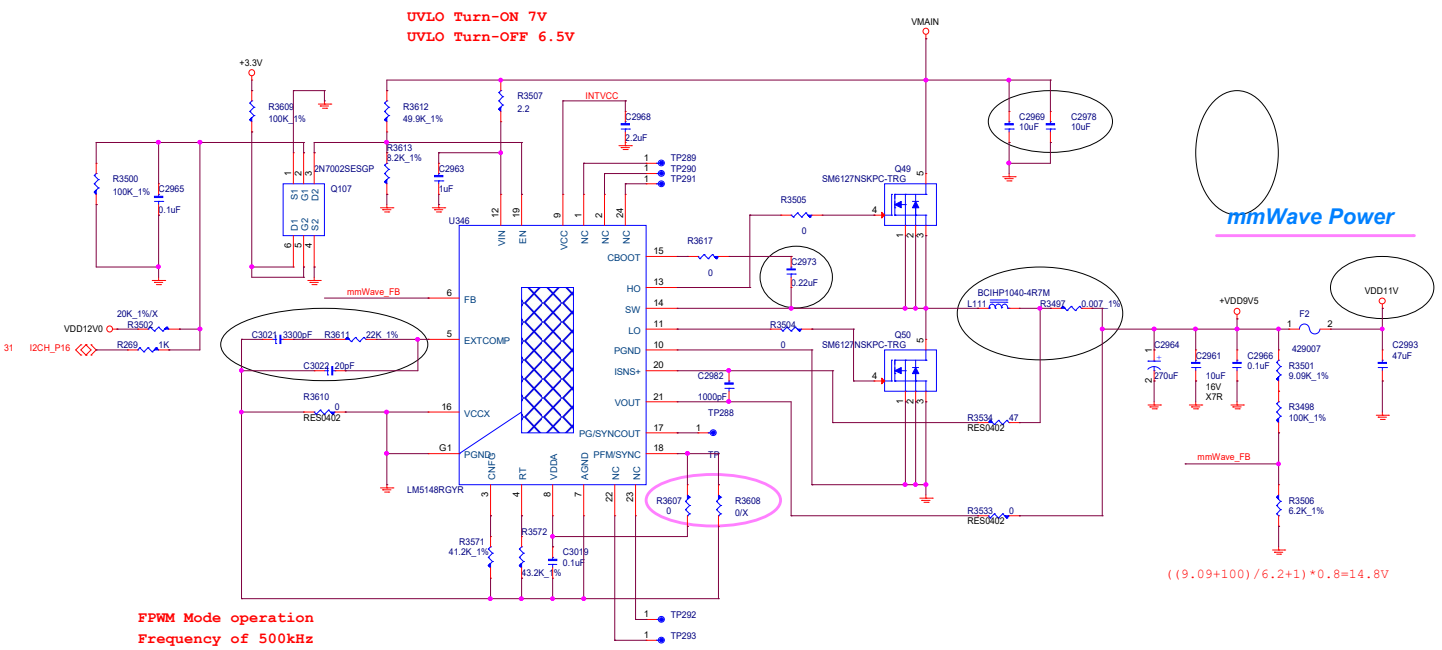

VIA TECHNOLOGIES INC.

Title	Can Bus Power	
Size	Document Number: M820 PRO -CB	Rev A2
Date: Wednesday, July 15, 2026	Sheet 64 of 66	