Phase-Shifted Full-Bridge Controller

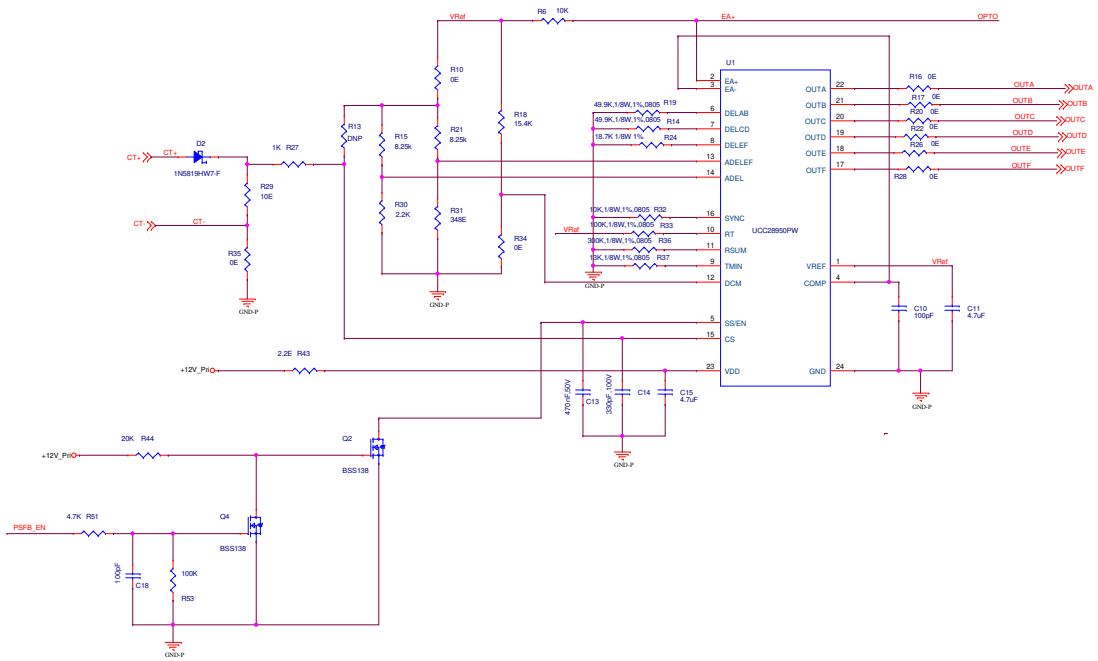

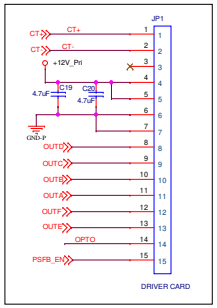

Title	3KW_PSFB_CARD		
Size A2	Document Number 1		Rev V1.0
Date: Wednesday, November 08, 2023	Sheet 1 of 1		