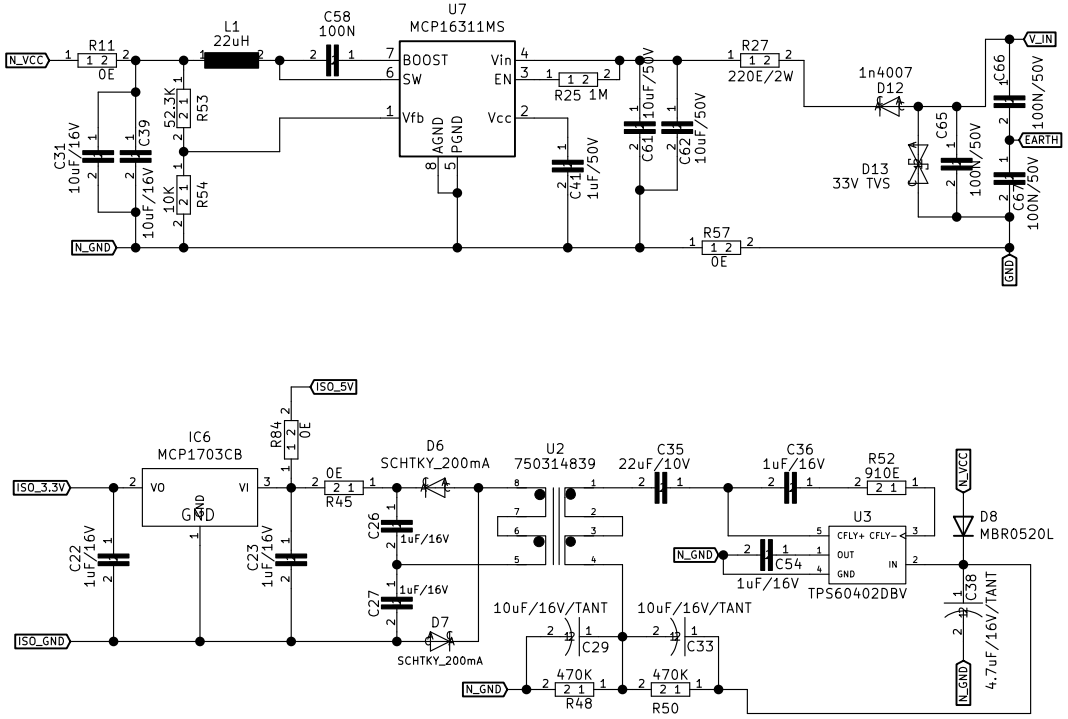
N_VCC
R11
0E
L1
22uH
C58
100N
U7
MCP16311MS
BOOST
SW
Vfb
AGND
PGND
Vin
EN
Vcc
R25 1M
C41
1uF/50V
C61
10uF/50V
C62
10uF/50V
R27
220E/2W
1n4007
D12
D13
33V TVS
C65
100N/50V
C66
100N/50V
C67
100N/50V
V_IN
EARTH
GND
R53
52.3K
R54
10K
C31
10uF/16V
C39
10uF/16V
N_GND
R57
0E
ISO_5V
R84
0E
IC6
MCP1703CB
VO
VI
GND
ISO_3.3V
ISO_GND
C22
1uF/16V
C23
1uF/16V
R45
0E
D6
SCHTKY_200mA
C26
1uF/16V
C27
1uF/16V
D7
SCHTKY_200mA
U2
750314839
C35
22uF/10V
C36
1uF/16V
R52
910E
U3
CFLY+
CFLY-
OUT
GND
IN
TPS60402DBV
C54
1uF/16V
N_GND
N_VCC
D8
MBR0520L
C38
4.7uF/16V/TANT
10uF/16V/TANT
C29
10uF/16V/TANT
C33
470K
R48
470K
R50