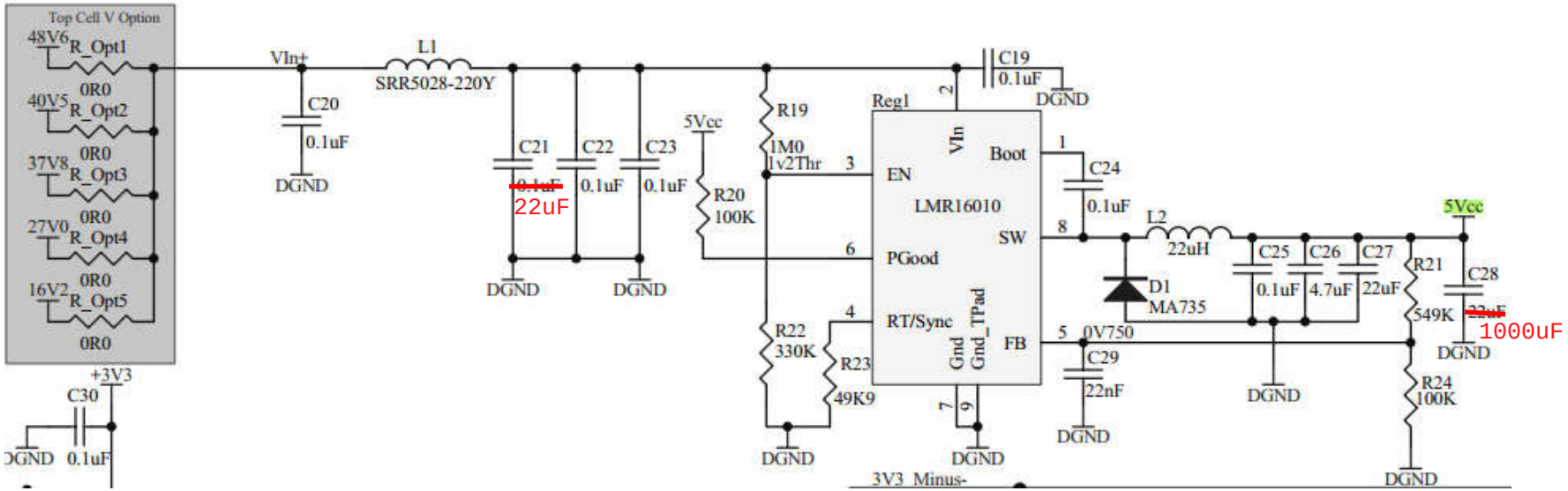
Top Cell V Option
48V6
R_Opt1
0R0
40V5
R_Opt2
0R0
37V8
R_Opt3
0R0
27V0
R_Opt4
0R0
16V2
R_Opt5
0R0
+3V3
C30
DGND
0.1uF
VIn+
C20
0.1uF
DGND
L1
SRR5028-220Y
C21
~~0.1uF~~
22uF
C22
0.1uF
C23
0.1uF
DGND
DGND
5Vcc
R20
100K
R19
1M0
1v2Thr
R22
330K
R23
49K9
DGND
DGND
Reg1
EN
VIn
Boot
LMR16010
SW
PGood
RT/Sync
Gnd
Gnd_TPad
FB
C19
0.1uF
DGND
C24
0.1uF
L2
22uH
D1
MA735
C25
0.1uF
C26
4.7uF
C27
22uF
DGND
0V750
C29
22nF
DGND
DGND
DGND
5Vcc
R21
549K
C28
~~22uF~~
1000uF
DGND
R24
100K
DGND
3V3_Minus-