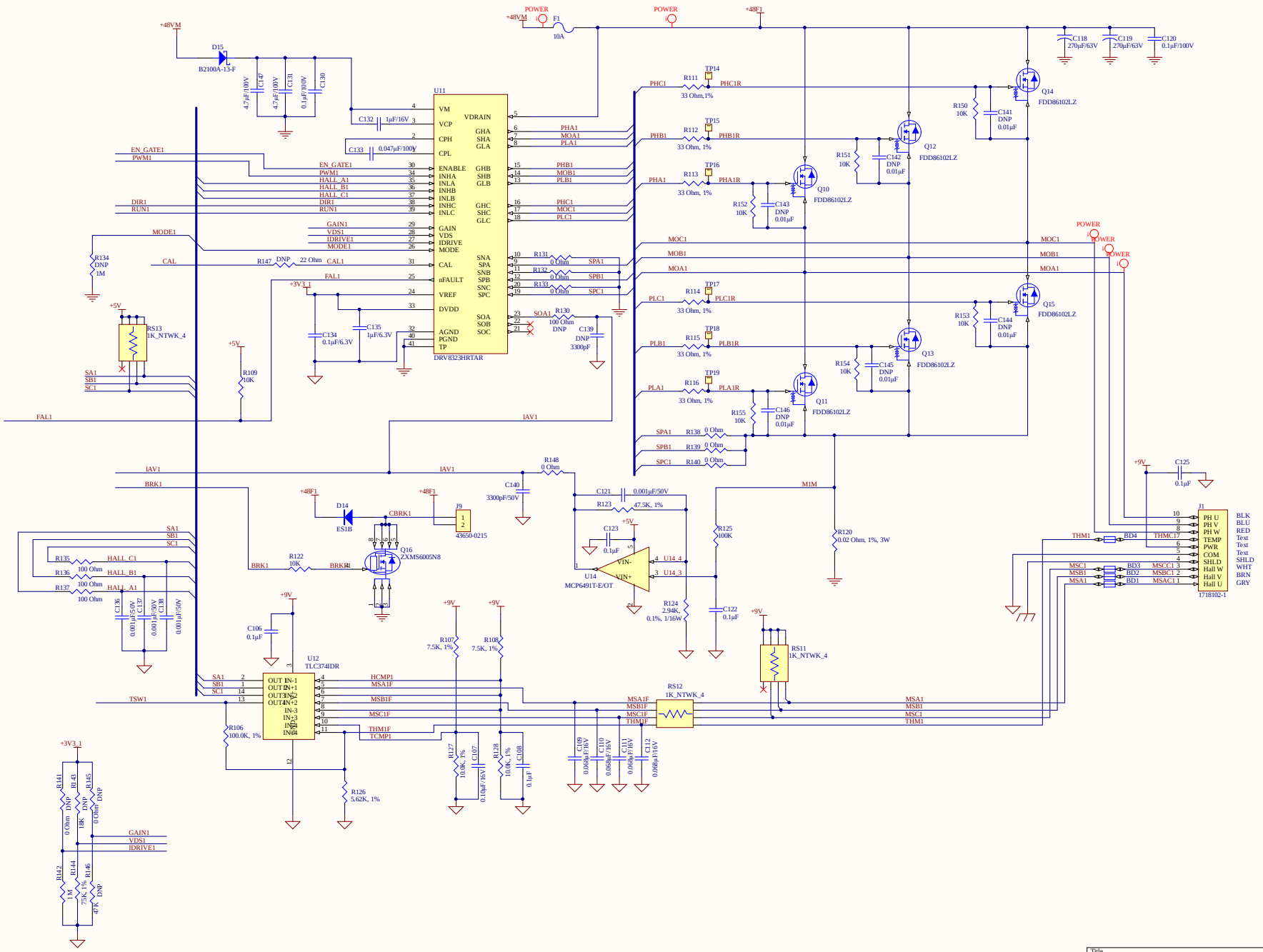


| Title | | |
|---|---|---|
| Size C | Number | Revision |
| Date: 9/23/2022 | Sheet 5 of 9 | |
| File: \\..\05.ROLL1.SchDoc | Drawn By: | |