REV	ECN NO	DESCRIPTION	DRN	APP'D	DATE

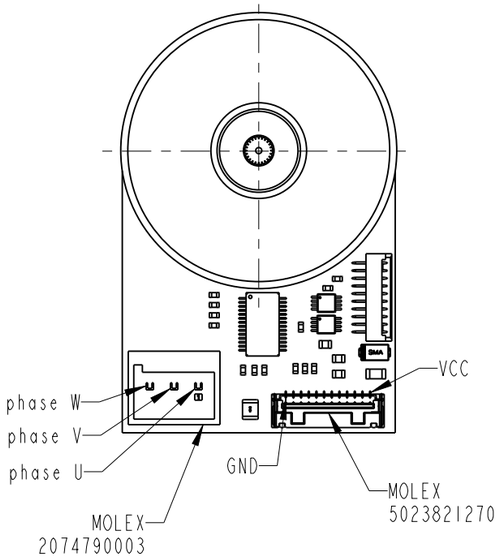

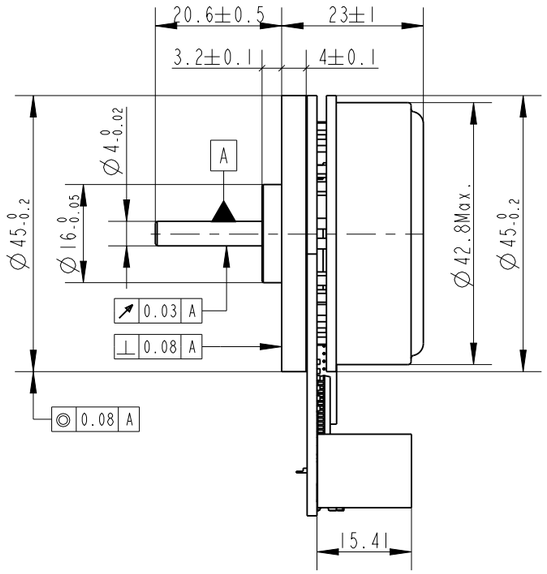

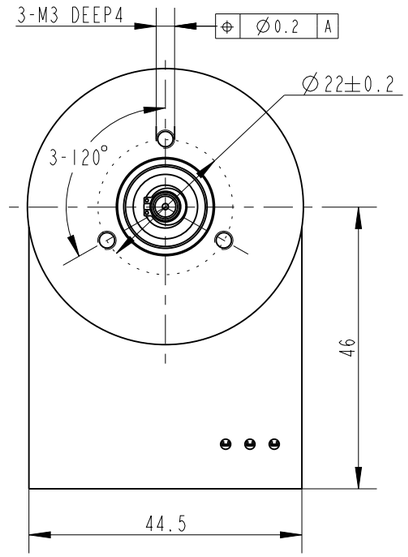

THREE-PHASE CONNECTING
STAR CONNECTION

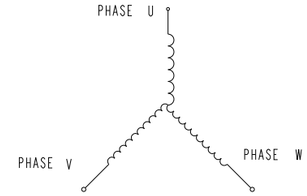

输出相位差
Output phase shift

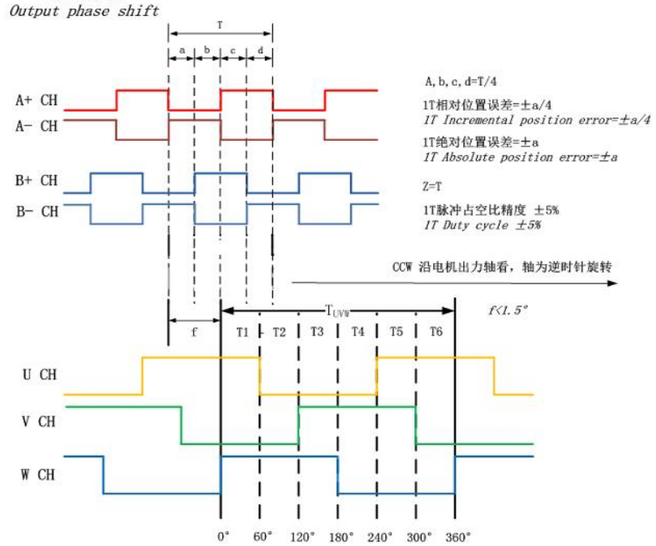

CCW from the front shaft

PRELIMINARY

保密

Encoder technical Parameters	
Output form	AA\BB\+HuHvHw
Output Interface	Directly output by chip
Diameter of shaft	
AB signal resolution	1024 pulse/revolution
UVW signal pole pairs	8
Accuracy	0.2°
Repeat accuracy	0.025°
Weight	<0.02KG
Max speed	20000RPM

NUMBER OF PHASE	绕组相数	3
NUMBER OF POLES	极数	16
LINE TO LINE RESISTANCE	线电阻	0.64±10% ohms@20°C (REF)
LINE TO LINE INDUCTANCE	线电感	0.31±20% mH@1kHz (REF)
NOMINAL VOLTAGE	额定电压	24 VDC
NO LOAD SPEED	空载转速	7450±10% RPM
NO LOAD CURRENT	空载电流	0.45 A (REF)
RATED TORQUE	额定转矩	70 mN.m
RATED SPEED	额定转速	6000±10% RPM
RATED CURRENT	额定电流	2.5 A
PEAK TORQUE	峰值转矩	210 mN.m
PEAK CURRENT	峰值电流	6.5 A
BACK EMF CONSTANT	反电势常数	2.36±10% Vrms/kRPM
TORQUE CONSTANT	转矩常数	31.83 mN.m/A
INSULATION CLASS	绝缘等级	B 130°C
DIELECTRIC STRENG	介电强度	600VAC 1SEC
INSULATION RESIST	绝缘电阻	100MOhm @500VDC
ROTOR INERTIA	转子转动惯量	135 g.cm²
WEIGHT	重量	120 g REF
OPERATION AMBIENT	使用环境	Ambient temperature:-20...+50°C,humidity Max.85%(No condensation)
STORAGE AMBIENT	存储环境	Ambient temperature:-20...+85°C,humidity Max.85%(No condensation)

Phases PIN Number		
PHASE U	PHASE V	PHASE W
PIN1	PIN2	PIN3

PERMISSIBLE RADIAL+AXIAL FORCE

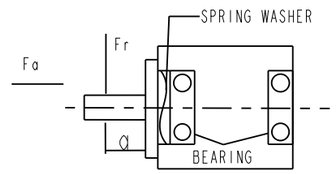

AXIAL-FORCE	轴向压力	Fa=10 N Max
DISTANCE	距离	a=10 mm
RADIAL-FORCE	径向压力	Fr=20 N Max
SHAFT RADIAL PLAY	径向间隙	0.02mm Max.@4N
SHAFT AXIAL PLAY	轴向间隙	0.14mm Max.@4N

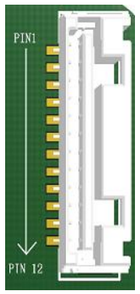

接线说明

PIN	Funktion
1	VCC
2	A\
3	A
4	B\
5	B
6	
7	
8	Hu
9	Hv
10	Hw
11	PE
12	GND

1024 pulse/revolution
encoder pin
hall 1-Hu
hall 2-Hv
hall 3-Hw

A			DESIGN	DATE	P/N. 3.1.02.045.XXXX
REV	ECN NO.	DESCRIPTION	SYP	2024.10.12	TITLE Specifications
UNLESS OTHERWISE SPECIFIED TOLERANCES: DECIMALS: .X ±0.5 .XX ±0.25 .XXX ±0.1 ANGULAR: ±0°30′ UNIT: mm DO NOT SCALE DRAWING	MATERIAL	WEIGHT	CHECK YY	2024.10.12	USED ON FL45BLW23-24V-6045A-EN
		SHEET 1 OF 1	STANDARDIZATION		DWG NO. REV A
	FIRST ANGLE PROJECTION	SCALE 1:1	APPD		FULLING MOTOR