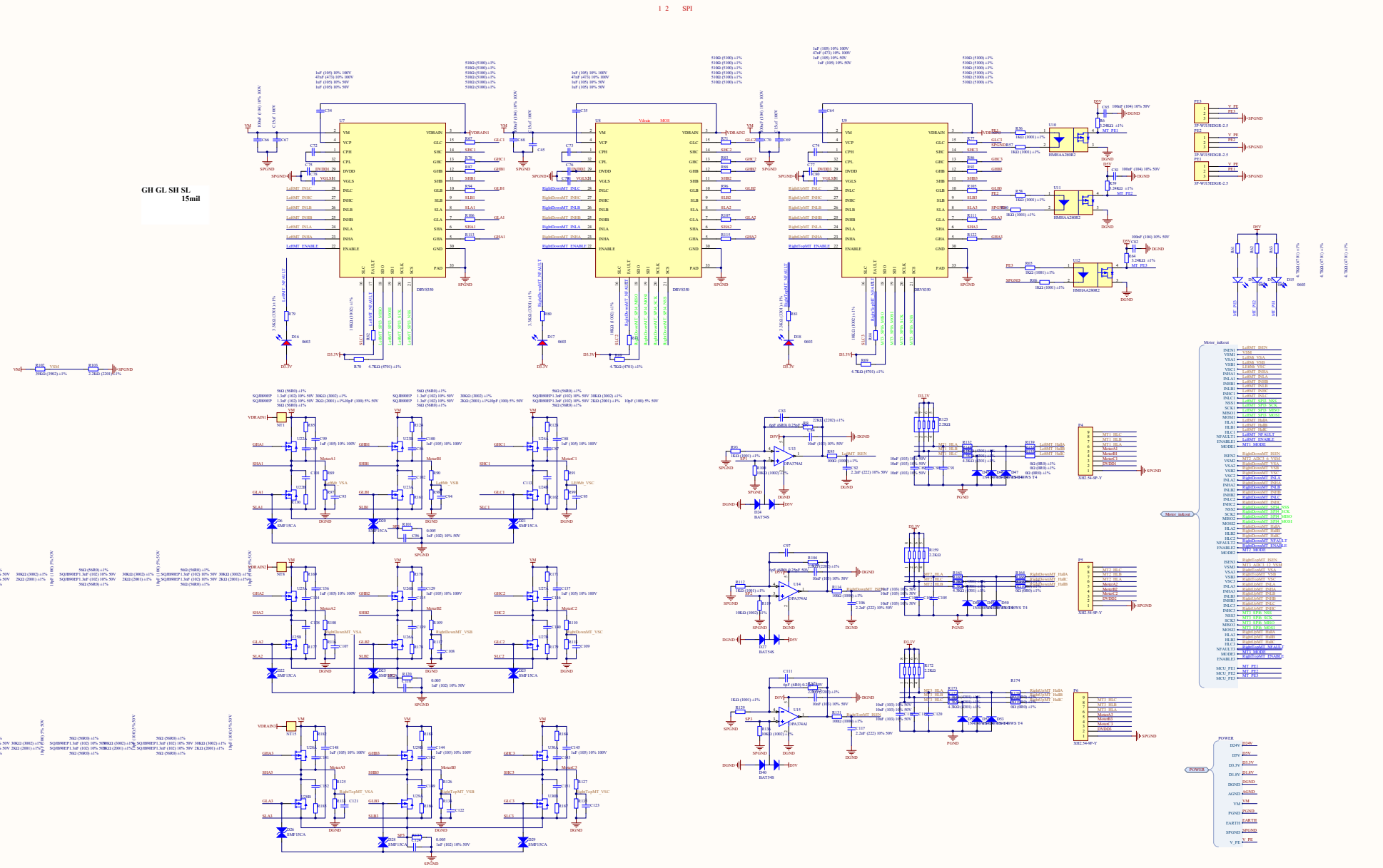

Title			
Size	Number		Revision
A1			
Date:	2022-6-4	Sheet of	
File:	D:\Hardware - Motor\Sch\Dvc	Drawn By:	

Comment	Description	Designator	Footprint	LibRef	Quantity
100nF (104) 10% 50V	贴片电容	C1, C2, C9, C10, C12, C14, C16, C18, C20, C22, C24, C26, C28, C30, C32, C36, C37, C41, C49, C50, C52, C53, C56, C57, C59, C61, C62, C63, C65, C81, C82, C125, C126, C127, C132, C135		C100nF (104) 0603 10% 50V	36
22pF (220) 5% 50V	贴片电容	C3, C4		C22pF (220) 0603 5% 50V	2
NC	贴片电容- 贴片电阻- 贴片晶振	C5, C6, C42, R15, Y2		0 ©(0R0) 1% 0805, 32.768KHz 20ppm 12.5pF, C22pF (220) 0603 5% 50V, C33nF (333) 0603 10% 50V	5
22nF (223) 10% 50V	贴片电容	C7		C22nF (223) 0603 10% 50V	1
10uF (106) 10% 10V	贴片电容	C8, C25, C54, C58, C71, C130, C131, C134		C10uF (106) 0603 10% 10V	8
1uF (105) 10% 50V	贴片电容	C11, C13, C15, C17, C19, C21, C23, C27, C29, C31, C33, C75, C76, C77, C78, C79, C80, C150		C1uF (105) 060310% 50V	18
1uF (105) 10% 100V	贴片电容	C34, C64	1206_C	C1uF 1206 (105) 10% 100V	2
1uF (105) 10% 100V	贴片电容	C35, C88, C99, C100, C129, C136, C137, C144, C145, C148		C1uF 0805 (105) 10% 100V, C1uF 1206 (105) 10% 100V	10
10nF (103) 10% 50V	贴片电容	C38, C159	0603_C	C10nF (103) 060310% 50V	2
680uf 直插铝电解电容		C39		C680uf 50V 直插电解电容	1
680u直插铝电解电容		C40		C680uf 50V 直插电解电容	1
10uF (106) 10% 50V	贴片电容	C43	1206_C	C10uF (106) 0805 10% 50V	1
4.7uF (475) 10% 50V	贴片电容	C44	1206_C	C4.7uF (475) 1206 10% 50V	1
C15uf 100V		C45, C67, C69		C15uf 100V	3
C100uf/16V	直插电解电容100uF 16V 5*7	C46		C100uF 16V 5*7	1
22uF (226) 20% 25V	贴片电容	C47		C22uF (226) 0805 20% 25V	1
4.7uF (475) 10% 50V	贴片电容	C48		C4.7uF (475) 1206 10% 50V	1
100nF (104) 10% 50V	贴片电容	C51, C60, C133, C155, C157	0603_C	C100nF (104) 0603 10% 50V	5
1uF (105) 10% 50V	贴片电容	C55, C153, C154	0603_C	C1uF (105) 060310% 50V	3
100nF (104) 10% 100V	贴片电容	C66, C68, C70		C100nF (104) 0603 10% 100V	3
47nF (473) 10% 100V	贴片电容	C72, C73, C74		C47nF (473) 0603 10% 100	3
6pF (6R0) 0.25pF 50V	贴片电容	C83, C97, C111		C6pF (6R0) 0603 06060.25pF 50V	3
10nF (103) 10% 50V	贴片电容	C84, C89, C90, C91, C98, C103, C104, C105, C112, C118, C119, C120		C10nF (103) 060310% 50V	12
1.3nF (102) 10% 50V	贴片电容	C85, C86, C87, C101, C102, C113, C114, C115, C116, C138, C139, C140, C141, C142, C143, C149, C151, C152		C1.3nF (102) 0603 10% 50V	18
2.2nF (222) 10% 50V	贴片电容	C92, C106, C117		C2.2nF (222) 0603 10% 50V	3
10pF (100) 5% 50V	贴片电容	C93, C94, C95, C107, C108, C109, C121, C122, C123		C10pF (100) 0603 5% 50V	9
1nF (102) 10% 50V	贴片电容	C96, C110, C124		C1nF (102) 0603 10% 50V	3
10pF (100) 5% 50V	贴片电容	C128	0603_C	C10pF (100) 0603 5% 50V	1
C22uf/16V	直插电解电容 SMD4.3*4.3	C146, C147		C22uf/16V	2
1nF (102) 10% 50V	贴片电容	C156	0603_C	C1nF (102) 0603 10% 50V	1
10uF (106) 10% 10V	贴片电容	C158	0603_C	C10uF (106) 0603 10% 10V	1
1uF (105) 10% 50V	贴片电容	C160	0805_C	C1uF 0805 (105) 10% 50V	1
C47uf/50V	直插电解电容	C188	C47uf/50v	C47uf/50V	1
红灯 0603	发光二极管	D1, D11, D12, D16, D17, D18	0603_LED_S1	红灯 0603	6
黄灯 0603	发光二极管	D2, D3, D4		黄灯 0603	3
蓝灯 0603	发光二极管	D5, D19		蓝灯 0603	2
SMF15CA	TVS	D6, D20, D21, D22, D23, D25, D26, D28, D29	SMFJ15CA	SMF15CA	9
V25PN60-M3/86A ST2054	肖特基二极管	D7	TO-277ASMPC	V25PN60-M3/86A	1
测试点		D8, D9, DGND		TEST	3
SMBJ6.8CA	TVS	D10	SMB(DO-214AA)_S4	SMBJ6.8CA	1
白灯 0603	发光二极管	D13, D14, D15	0603_LED_S1	白灯 0603	3
BAT54S	肖特基二极管	D24, D27, D40		BAT54S	3
1N4148WS T4	二极管	D30, D45, D46, D47, D48, D49, D50, D51, D52, D53	SOD-323	1N4148WS T4	10
V25PN60-M3/86A	肖特基二极管	D99	TO-277ASMPC	V25PN60-M3/86A	1
直插式自恢复保险丝	30V-900	F1		直插式自恢复保险丝	1
带网络变压器RJ45 LPJ16211BENL	RJ45带变压器 LPJ16211BENL	J1, J2	RJ45-LINKPP	带网络变压器RJ45	2
ACM70V-701-2PL-TL00	共模扼流圈	L1		共模电感ACV70V	1
L15uH 功率电感常规		L2		L15uH 功率电感常规	1
NT空焊盘		NT1, NT8, NT15		NC	3
4芯-XH2.54白色直-冻做		P1		XH2.54-4P-直立	1
HX1.5		P2	HX1.5-3P	HX1.5	1
3.5mm-2P绿色弯座	2芯压线底座	P3		2芯压线座	1
XH2.54-9P-Y		P4, P5, P6	2.54Header-9P	XH-2.54-9-Y	3
7P-WJ15EDGR-2.5	7P-WJ15EDGR-2.5	P7		7P-WJ15EDGR-2.5	1
3P-WJ15EDGR-2.5 黑色	7P-WJ15EDGR-2.5 黑色	PE1		3P-WJ15EDGR-2.5	1
3P-WJ15EDGR-2.5 绿色	7P-WJ15EDGR-2.5 绿色	PE2	WJ15EDGRC-2.5-3P	3P-WJ15EDGR-2.5	1
3P-WJ15EDGR-2.5 灰色	7P-WJ15EDGR-2.5 灰色	PE3		3P-WJ15EDGR-2.5	1
IXTQ200N10T	MOS(场效应管)	Q2	TO-3P-3_L15.8-W4.8-P5.45-L	FDA50N50	1
3.3K ©(3301) ±1%	贴片电阻	R1, R2, R4, R5, R14, R79, R80, R81		3.3K ©(3301) 1% 0603	8
3.3K ©(3301) ±1%	贴片电阻	R3, R17, R18	0603_R	3.3K ©(3301) 1% 0603	3
3.24K © ±1%	贴片电阻	R6, R59, R64		3.24K © 1% 0603_1	3
10K ©(1002) ±1%	贴片电阻	R7, R8, R10, R12, R13, R48, R53, R54, R82, R84, R100, R119		10K ©(1002) 1% 0603	12
22K ©(2202) ±1%	贴片电阻	R9, R121		22K ©(2202) 1% 0603	2
10K ©(1002) ±1%	贴片电阻	R11, R136, R193, R196, R201	0603_R	10K ©(1002) 1% 0603	5
0 ©(0R0) ±1%	贴片电阻	R16, R51		0 ©(0R0) 1% 0603	2
0 ©(0R0) ±1%	贴片磁珠, 贴片电阻	R19, R139, R153, R155, R164, R166, R168, R174, R176, R181	0603_R	0 ©(0R0) 1% 0603	10
330 ©(3300) ±1%	贴片电阻	R20, R23, R35, R38		330 ©(3300) 1% 0603	4
4.7K ©(4701) ±1%	贴片电阻	R21, R22, R61, R62, R63, R69, R70, R72, R73, R74, R75, R76		4.7K ©(4701) 1% 0603	12
22 ©(22R0) ±1%	贴片电阻	R24, R25, R52		22 ©(22R0) 1% 0603	3
49.9 ©(49R9) ±1%	贴片电阻	R26, R27, R29	0603_R	49.9 ©(49R9) 1% 0603	3
39 © ±1%	贴片电阻	R28, R30	0603_R	390 ©(3900) 1% 0603	2
49.9 ©(49R9) ±1%	贴片电阻	R31, R33, R34, R36, R37		49.9 ©(49R9) 1% 0603	5
39 © ±1%	贴片电阻	R32, R40, R42, R47		390 ©(3900) 1% 0603	4
110 ©(1100) ±1%	贴片电阻	R39, R41, R43, R45, R55, R143		110 ©(1100) 1% 0603	6
1K ©(1001) ±1%	贴片电阻	R44, R46, R50, R56, R57, R58, R60, R65, R66, R93, R112, R138, R142, R145, R147, R150, R152		1K ©(1001) 1% 0603, 1K ©(1001) 1% 1206	17
11.8K ©(1001) ±1%	贴片电阻	R49		1K ©(1001) 1% 0603	1
510 ©(5100) ±1%	贴片电阻	R67, R71, R77, R78, R86, R87, R88, R92, R94, R96, R105, R106, R107, R113, R122		510 ©(5100) 1% 0603	15
4.7K ©(4701) ±1%	贴片电阻	R68	0603_R	4.7K ©(4701) 1% 0603	1
510 ©(5100) ±1%	贴片电阻	R83, R111, R115	0603_R	510 ©(5100) 1% 0603	3
56 ©(56R0) ±1%	贴片电阻	R85		56 ©(56R0) 1% 0603	1
30K ©(3002) ±1%	贴片电阻	R89, R90, R91		30K ©(3002) 1% 0603	3
100 ©(1000) ±1%	贴片电阻	R95, R114		100 ©(1000) 1% 0603	2
2K ©(2001) ±1%	贴片电阻	R97, R99		2K ©(2001) 1% 0603	2
2K ©(2001) ±1%	贴片电阻	R98, R116, R117, R118, R133, R134, R135, R197	0603_R	2K ©(2001) 1% 0603	8
0.005采样电阻		R101, R120, R137	2010_R	0.005 ©	3
39K ©(3902) ±1%	贴片电阻	R102	0603_R	39K ©(3902) 1% 0603	1
2.2K ©(2201) ±1%	贴片电阻	R103	0603_R	2.2K ©(2201) 1% 0603	1
22K ©(2202) ±1%	贴片电阻	R104	0603_R	22K ©(2202) 1% 0603	1
30K ©(3002) ±1%	贴片电阻	R108, R109, R110, R125, R126, R127	0603_R	30K ©(3002) 1% 0603	6
2.2K ©贴片排阻	2.2K ©贴片排阻	R123, R159		2.2K ©贴片排阻	2
56 ©(56R0) ±1%	贴片电阻	R124, R128, R130, R161, R162, R169, R170, R171, R177, R178, R179, R182, R183, R184, R185, R186, R187	0603_R	56 ©(56R0) 1% 0603	17
1K ©(1001) ±1%	贴片电阻	R129	1206_R	1K ©(1001) 1% 1206	1
100 ©(1000) ±1%	贴片电阻	R131, R191	0603_R	100 ©(1000) 1% 0603	2
4.3K ©(4301) ±1%	贴片电阻	R132, R148, R154, R163, R165, R167, R173, R175, R180	0603_R	4.3K ©(4301) 1% 0603	9
2.7K ©(272) ±1%	1210W2J0272T5E	R140, R144, R149		2.7K ©(272 ±5%	3
2.7K ©(2701) ±1%	贴片电阻	R141, R146, R151		2.7K ©(2701) 1% 0603	3
80R 2512 贴片电阻 1W		R158		80R 2512 贴片电阻 1W	1
2.2K ©贴片排阻	2.2K ©贴片排阻	R172	0804_R*4	2.2K ©贴片排阻	1
100K ©(1003) ±1%	贴片电阻	R189, R199	0603_R	100K ©(1003) 1% 0603	2
11K ©(1102) ±1%	贴片电阻	R190	0603_R	11K ©(1102) 1% 0603	1
1K ©(1001) ±1%	贴片电阻	R192	0603_R	1K ©(1001) 1% 0603	1
56K ©(5602) ±1%	贴片电阻	R194	0603_R	56K ©(5602) 1% 0603	1
1.1K ©(1101) ±1%	贴片电阻	R195	0603_R	1.1K ©(1101) 1% 0603	1
13K ©(1302) ±1%	贴片电阻	R198	0603_R	13K ©(1302) 1% 0603	1
8.2K ©(8201) ±1%	贴片电阻	R200	0603_R	8.2K ©(8201) 1% 0603	1
0.024采样电阻		R202	2512_R	0.024 ©	1
STM32F429ZGT6		U1		STM32F429ZGT6	1
LM4125		U2		LM4125AMI2.5	1
EEPROM/AT24C512C-SSHL-T	EEPROM	U3		EEPROM/AT24C256C-SSHL-T_[C6482]	1
WRB2405SD-3WR2		U4		WRB2405SD-3WR2 隔离电源模块	1
K7805M-1000R3（L）		U4_1		K7805M-1000R3（L）	1
AZ1117	低压差线性稳压(LDO)	U5		AZ1117	1
KSZ8863		U6		KSZ8863	1
DRV8350三相无刷电机驱动	DRV8350SRTVR	U7, U9		DRV8350三相无刷电机驱动	2
DRV8350三相无刷电机驱动	DRV8350SRTVR	U8	DRV8350-QFN32	DRV8350三相无刷电机驱动	1
HMHAA280R2		U10, U11		HMHAA290R2 光耦	2
HMHAA280R2		U12	HMHAA280R2	HMHAA290R2 光耦	1
OPA374AI精密运放		U13, U14, U15		OPA374AI	3
光耦MOCD207R2M 2路	2路	U16, U17, U18		光耦MOCD207R2M	3
ESD防护器件		U19, U20		ESDSLVU2.8-4	2
TMUX1119-DCK	TMUX1119-DCK	U21		TMUX1119-DCK	1
SQJB90EP	MOS(场效应管)	U22, U24, U26, U30	SQJB90EP-SO-8L	SQJB90EP	4
SQJB90EP	MOS(场效应管)	U23, U25, U27, U28, U29		SQJB90EP	5
MCP9701AT-E/TT	MCP9701AT-E/TT	U32, U34		MCP9701AT-E/TT	2
MCP9701AT-E/TT	MCP9701AT-E/TT	U33	MCP9701AT-E/TT	MCP9701AT-E/TT	1
GS8552	双通道轨到轨运放	U35	SOP-8_150mil	GS8552	1
25MHZ 12PF 10PPM	贴片晶振	Y1		25MHZ 12PF 10PPM	1
50MHZ晶振		Y3		50M晶振	1
SMBJ33CA	TVS	Z1, Z2	SMB(DO-214AA)_S1	SMBJ33CA	2
SMBJ8.5CA	TVS	Z3	SMB(DO-214AA)_S1	SMBJ8.5CA	1
0 ©磁珠	贴片电阻	Z4, Z5		0 ©(0R0) 1% 0603	2
0 ©磁珠	贴片电阻	Z6, Z7	1206_L	0 ©(0R0) 1% 0603	2