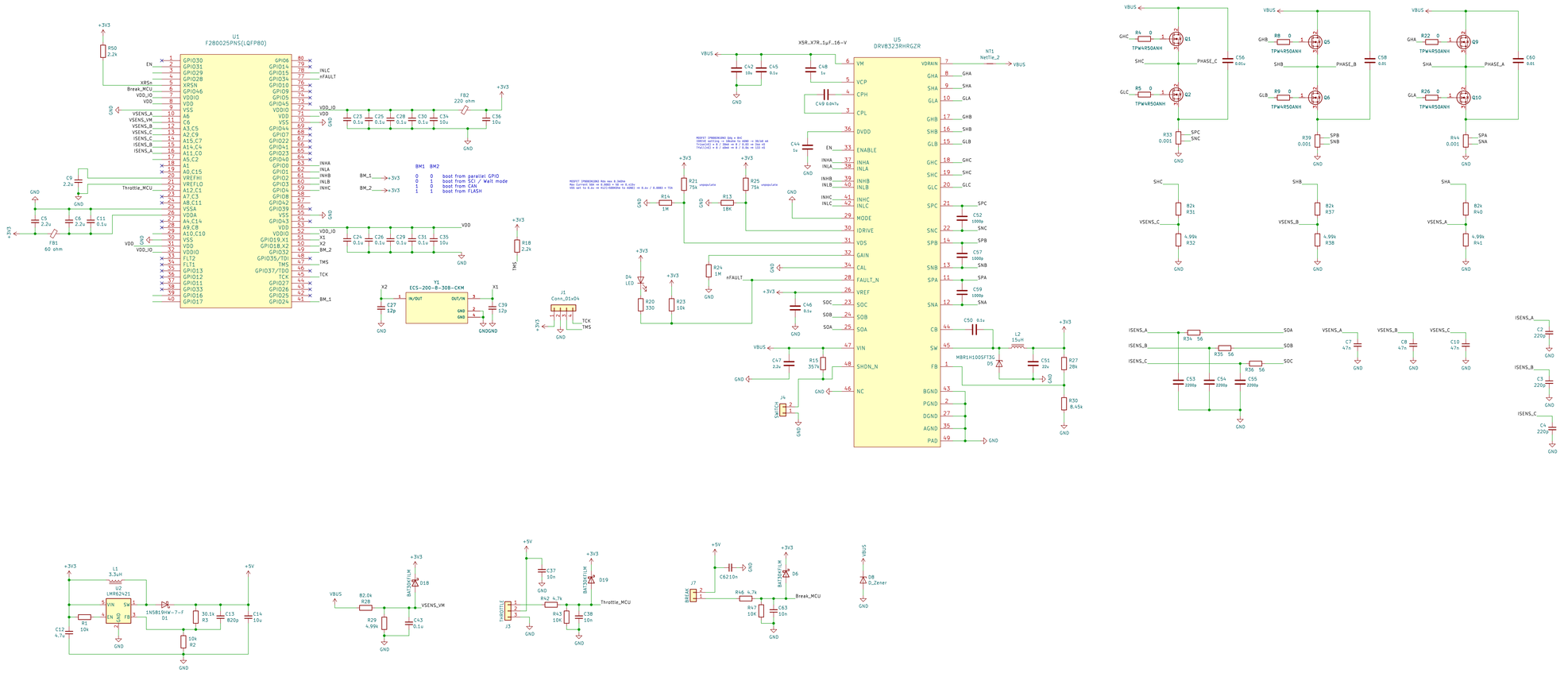


Speedict Technology

Sheet: /

File: saturn.kicad_sch

**Title: SATURN Controller**

| | | |
|---|---|---|
| Size: A1 | Date: | Rev: 1.0 |
| KiCad E.D.A. kicad 7.0.5-0 | | Id: 1/1 |