MCU A

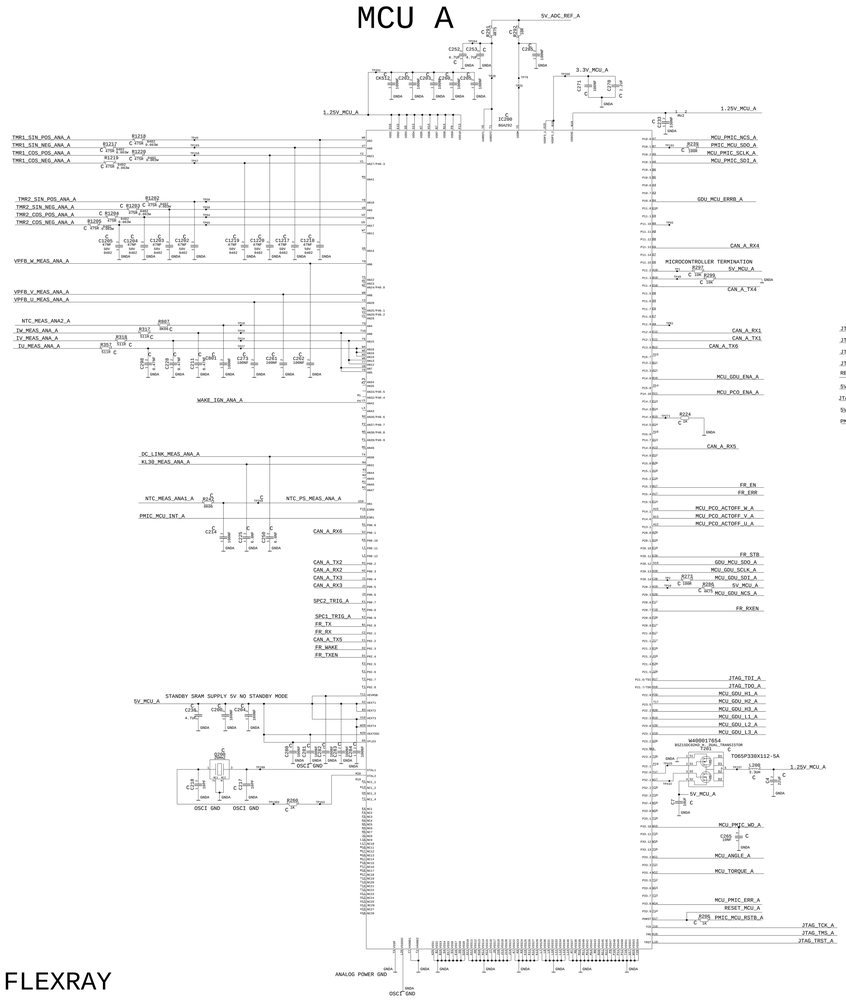

MCU B

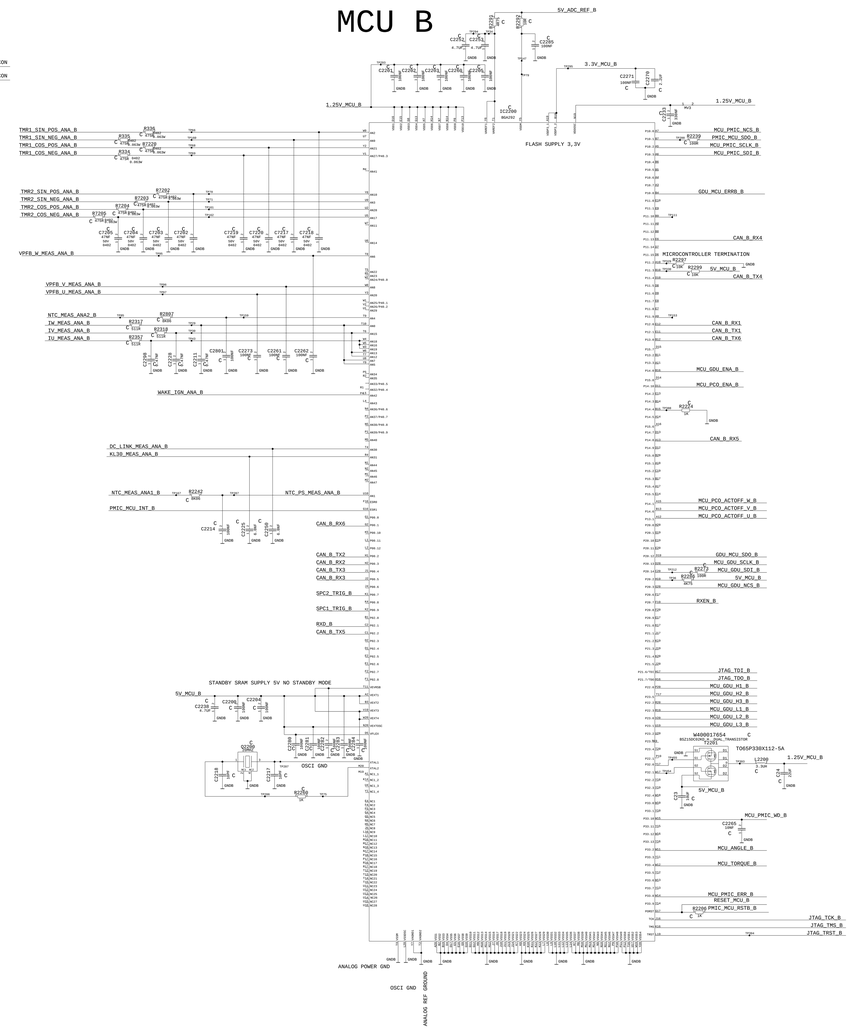

FLEXRAY

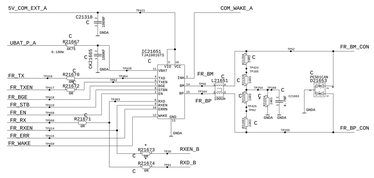

TORQUE INTERFACE A

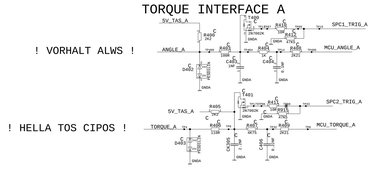

TORQUE INTERFACE B

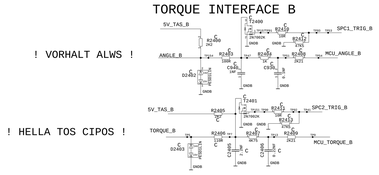

CAN1_INT_A

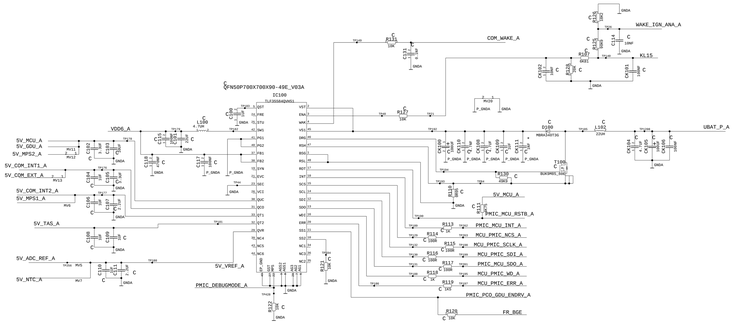

CAN2_INT_B

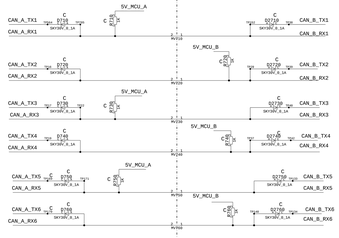

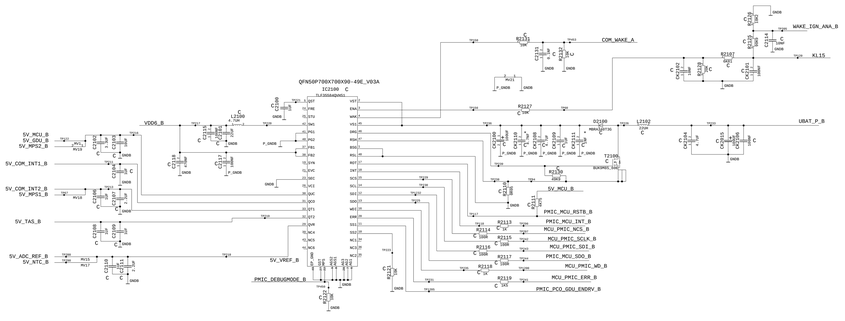

DATA DERIVED FROM SCHEMATICS IN ORIGINAL ENGLISH GERMAN VERSION. ALL TRANSLATIONS ARE WITHOUT GUARANTEE OF CORRECTNESS. FOR ANY ERRORS IN TRANSLATION REFERENCE SHOULD BE MADE TO THE ORIGINAL GERMAN VERSION.

THIS DOCUMENT AND INFORMATION IS PROPRIETARY, AND REGARDING COPYRIGHT WE RESERVE ALL RIGHTS. DISCLOSURE TO THIRD PARTIES OR REPRODUCTION OF THIS DOCUMENT WITHOUT OUR WRITTEN PERMISSION IS PROHIBITED. ALL RIGHTS RESERVED, especially the right to apply for protective rights.

Project name:	
Project number:	
Date:	2020-07-09
Author:	DORFDION SCHULTE
Model(MM):	E:SC:0:575
Sheet:	CIRCUIT DIAGRAM
	EPS VW BS CONTROL PCB CO-SAMPLE
Project Text:	
Sheet Size:	A3
Page: 1	Page(sum): 1
Scale: 1:1	
Author Id:	
Revision:	
Hella Aglas Huwek & Co	