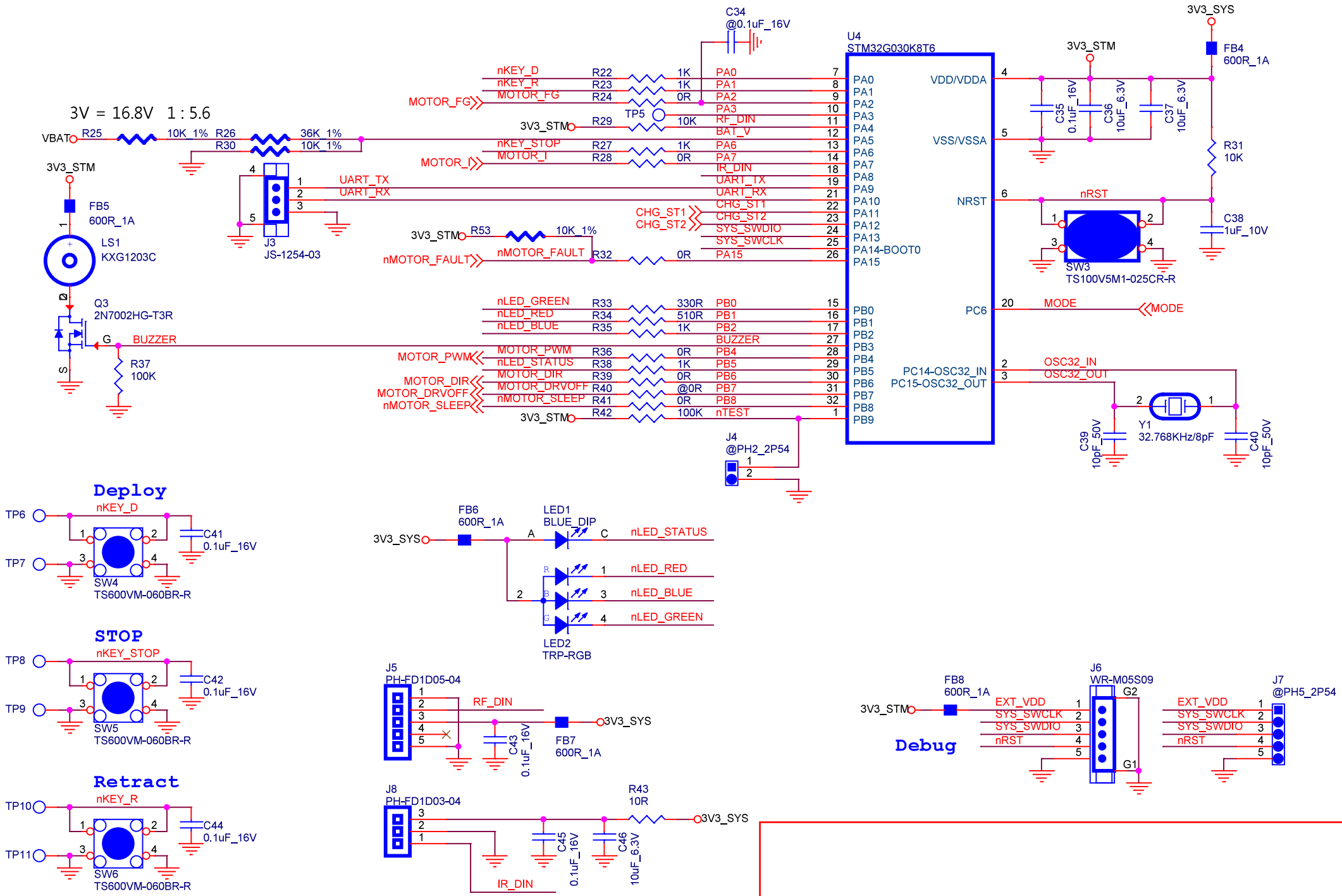
3V = 16.8V 1 : 5.6
VBAT
R25 10K 1%
R26 36K 1%
R30 10K 1%
3V3_STM
FB5 600R_1A
LS1 KXG1203C
Q3 2N7002HG-T3R
G
BUZZER
R37 100K
J3 JS-1254-03
UART_TX
UART_RX
C34 @0.1uF_16V
U4 STM32G030K8T6
nKEY_D R22 1K PA0
nKEY_R R23 1K PA1
MOTOR_FG R24 0R PA2
PA3
TP5
3V3_STM R29 10K RF_DIN
BAT_V
nKEY_STOP R27 1K PA6
MOTOR_I R28 0R PA7
IR_DIN
UART_TX
UART_RX
CHG_ST1
CHG_ST2
SYS_SWDIO
SYS_SWCLK
3V3_STM R53 10K 1%
nMOTOR_FAULT R32 0R PA15
nLED_GREEN R33 330R PB0
nLED_RED R34 510R PB1
nLED_BLUE R35 1K PB2
BUZZER
MOTOR_PWM R36 0R PB4
nLED_STATUS R38 1K PB5
MOTOR_DIR R39 0R PB6
MOTOR_DRVOFF R40 @0R PB7
nMOTOR_SLEEP R41 0R PB8
3V3_STM R42 100K nTEST
J4 @PH2_2P54
VDD/VDDA
VSS/VSSA
NRST
PC6
PC14-OSC32_IN
PC15-OSC32_OUT
3V3_STM
C35 0.1uF_16V
C36 10uF_6.3V
C37 10uF_6.3V
3V3_SYS
FB4 600R_1A
R31 10K
nRST
C38 1uF_10V
SW3 TS100V5M1-025CR-R
MODE
OSC32_IN
OSC32_OUT
Y1 32.768KHz/8pF
C39 10pF_50V
C40 10pF_50V
Deploy
TP6
TP7
nKEY_D
C41 0.1uF_16V
SW4 TS600VM-060BR-R
STOP
TP8
TP9
nKEY_STOP
C42 0.1uF_16V
SW5 TS600VM-060BR-R
Retract
TP10
TP11
nKEY_R
C44 0.1uF_16V
SW6 TS600VM-060BR-R
3V3_SYS
FB6 600R_1A
LED1 BLUE_DIP
nLED_STATUS
nLED_RED
nLED_BLUE
nLED_GREEN
LED2 TRP-RGB
J5 PH-FD1D05-04
RF_DIN
C43 0.1uF_16V
FB7 600R_1A
J8 PH-FD1D03-04
IR_DIN
C45 0.1uF_16V
C46 10uF_6.3V
R43 10R
3V3_STM
FB8 600R_1A
Debug
EXT_VDD
SYS_SWCLK
SYS_SWDIO
nRST
J6 WR-M05S09
J7 @PH5_2P54

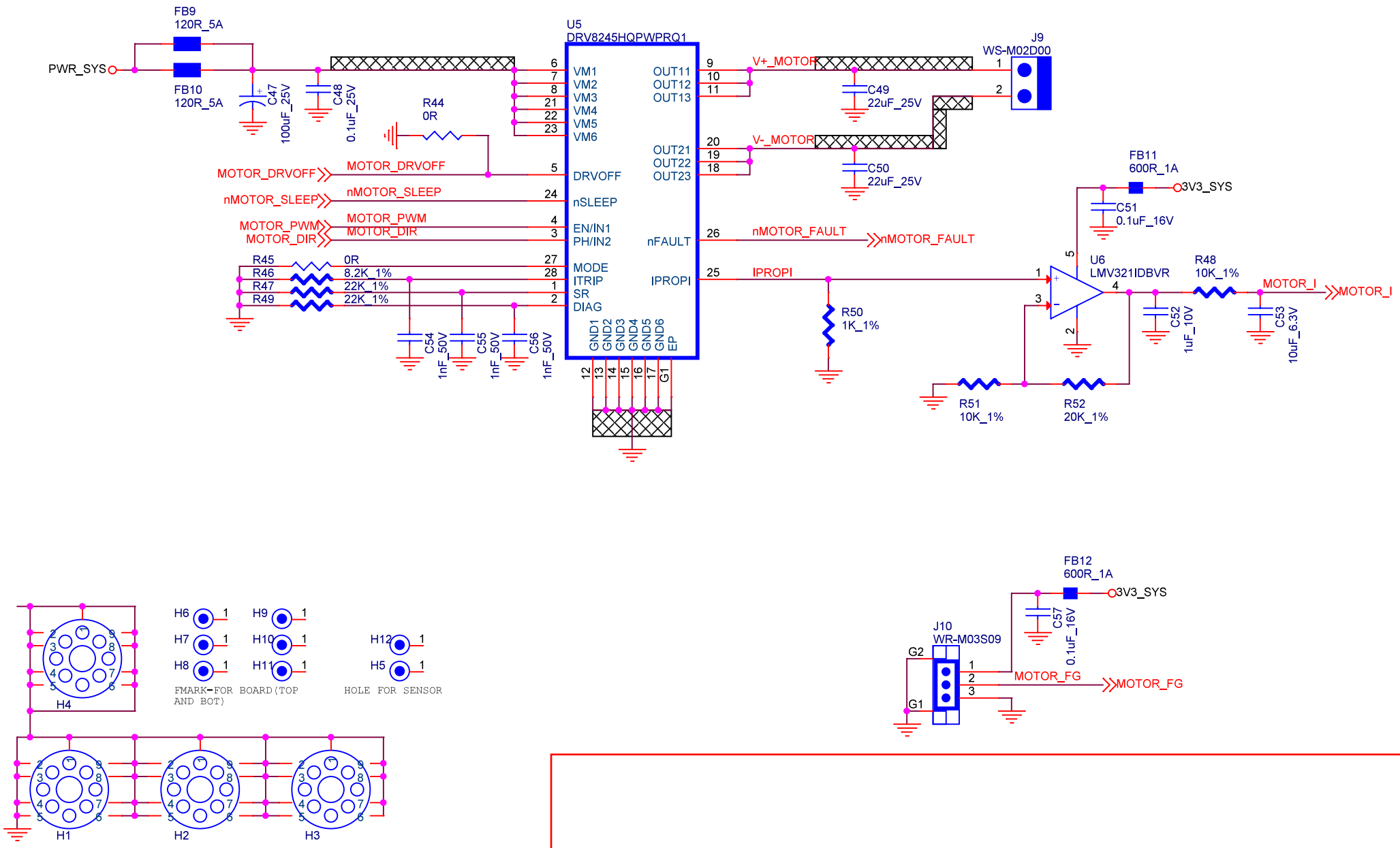
FB9
120R_5A
PWR_SYS
FB10
120R_5A
C47
100uF_25V
C48
0.1uF_25V
R44
0R
U5
DRV8245HQPWPRQ1
VM1
VM2
VM3
VM4
VM5
VM6
OUT11
OUT12
OUT13
OUT21
OUT22
OUT23
V+_MOTOR
V-_MOTOR
C49
22uF_25V
C50
22uF_25V
J9
WS-M02D00
MOTOR_DRVOFF
DRVOFF
nMOTOR_SLEEP
nSLEEP
MOTOR_PWM
MOTOR_DIR
EN/IN1
PH/IN2
nFAULT
nMOTOR_FAULT
R45
0R
R46
8.2K_1%
R47
22K_1%
R49
22K_1%
MODE
ITRIP
SR
DIAG
IPROPI
R50
1K_1%
C54
1nF_50V
C55
1nF_50V
C56
1nF_50V
GND1
GND2
GND3
GND4
GND5
GND6
EP
G1
FB11
600R_1A
3V3_SYS
C51
0.1uF_16V
U6
LMV321IDBVR
R48
10K_1%
MOTOR_I
C52
1uF_10V
C53
10uF_6.3V
R51
10K_1%
R52
20K_1%
H4
H6
H7
H8
H9
H10
H11
H12
H5
FMARK-FOR BOARD(TOP AND BOT)
HOLE FOR SENSOR
H1
H2
H3
FB12
600R_1A
3V3_SYS
C57
0.1uF_16V
J10
WR-M03S09
G2
G1
MOTOR_FG