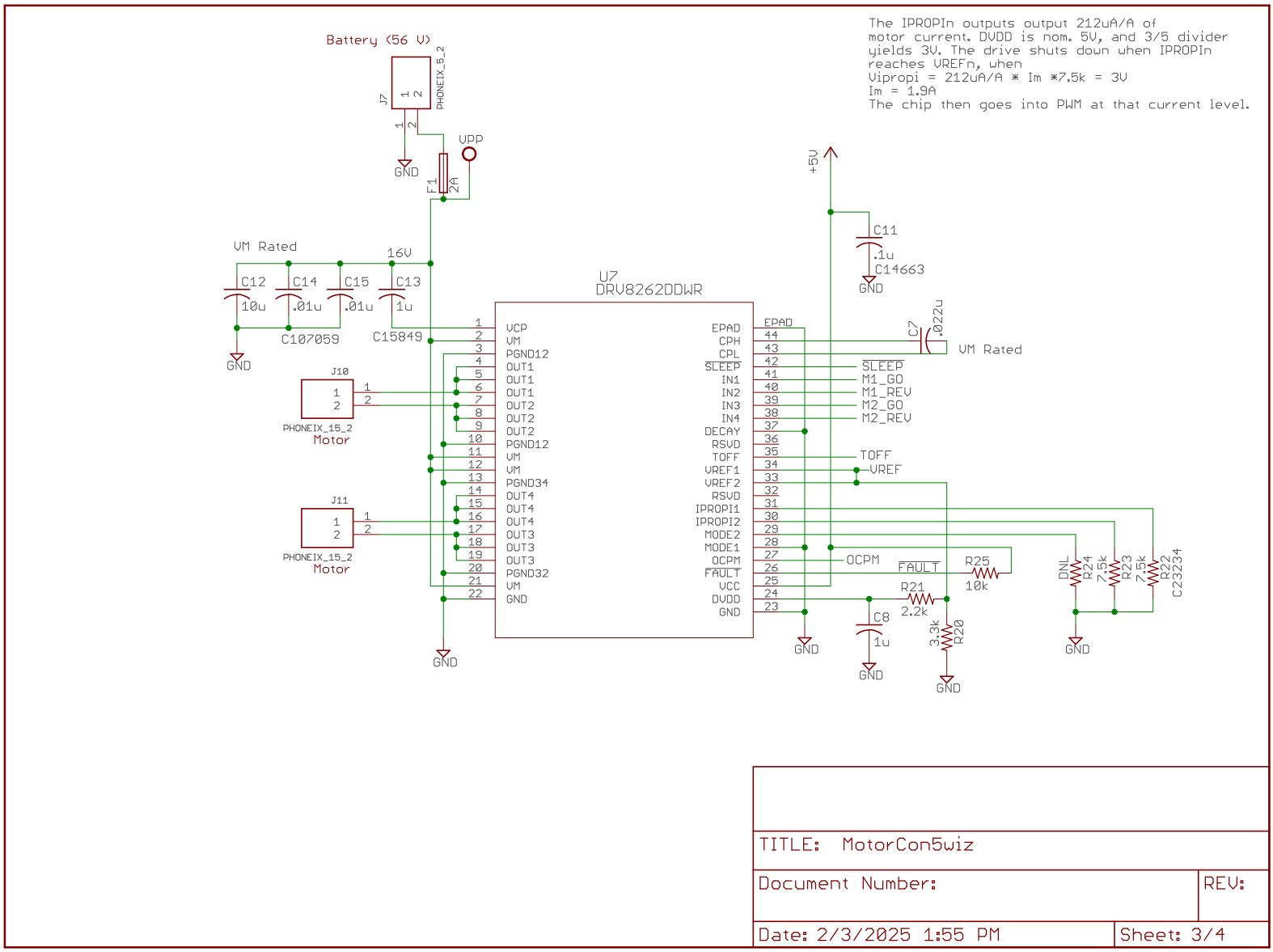

TITLE: MotorCon5wiz	
Document Number:	REV:
Date: 2/3/2025 1:55 PM	Sheet: 3/4