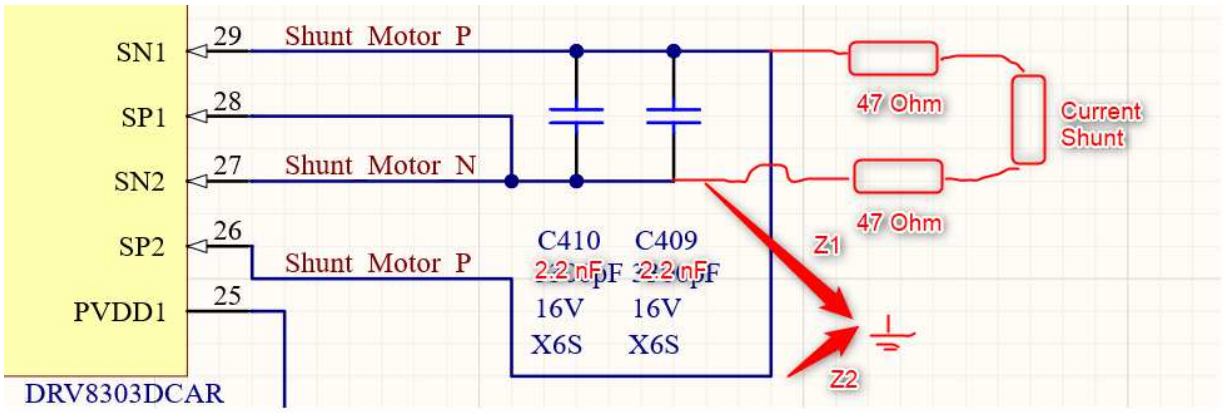
SN1
29
Shunt Motor P
SP1
28
SN2
27
Shunt Motor N
SP2
26
Shunt Motor P
PVDD1
25
DRV8303DCAR
C410
C409
16V
16V
X6S
X6S
47 Ohm
47 Ohm
Current
Shunt
Z1
Z2